HANSA-TMP
MANUFACTURING YOUR SUCCESS

HT 16 / M / 2014 / 1121 / E

THE PRODUCTION LINE OF HANSA-TMP

Variable Displacement Closed Loop System Axial Piston Pump

TPV 4300

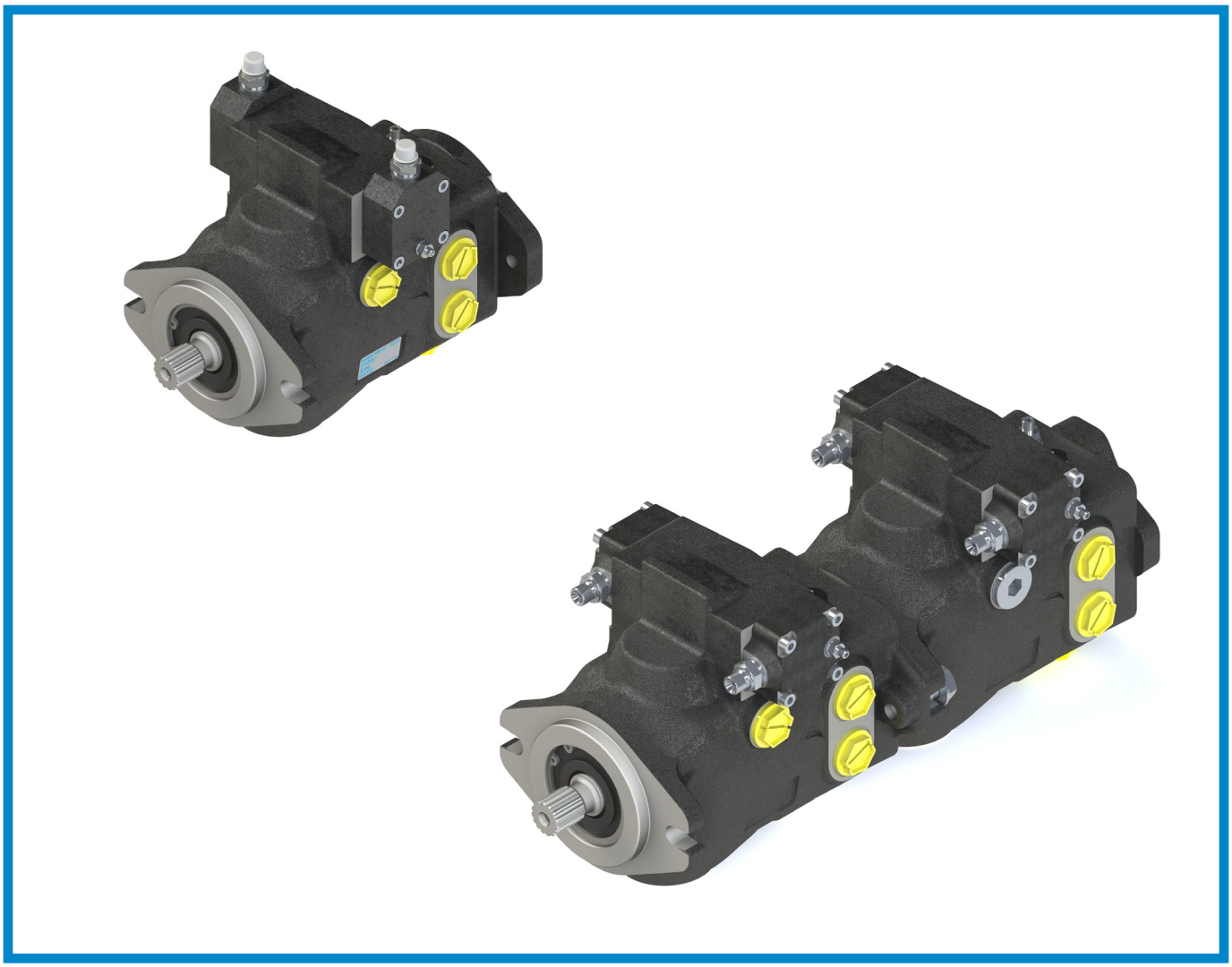

INDEX

INDEX
(continued)

TPVT 4300

GENERAL INFORMATION

- The new TPV-TPVT 4300 are variable displacement axial piston pumps with swash-plate system, for closed loop hydrostatic transmissions, that offer the best power to weight ratio because of new innovative design and production technologies.

- The flow rate is proportional to the rotation speed and is continuously variable according to the angle of the swash-plate from "0" to maximum displacement.

- The TPV-TPVT 4300 is equipped with a boost pump, “gerotor” type of new design and high efficiency to keep the circuit pressurised, to compensate the oil leakages of the hydrostatic transmission, to avoid cavitation of the piston pump and to supply low pressure oil flow to the remote controls of the pumps and of the hydraulic transmission (max 3 MPa).

- Different types of hydraulic or electro-proportional controls are available for remote regulation of the pump displacement by means of hydraulic or electric joysticks.
  The mounting flange is according to SAE-B 2 bolt, the through-drive is according SAE-A 2 bolt.
  Different other optionals are available for the TPV-TPVT 4300.

- The piston pumps are to be considered as individual components for the purposes of Directive 98/37/EC, therefore have been built to be integrated into a circuit or to be assembled with other components to form a machine or system. They can be operated only after they have been installed in the machine/system which they are intended for.

- The TPV-TPVT 4300 pumps must be used to create, manage and regulate oil flow in a closed loop system. Any other use should be considered improper.

- The pumps are built according to the technology normally used for this type of product. There is the risk of injury or damage to personnel during their installation and use if you do not respect the normal safety instructions or if used by untrained personnel.

TECHNICAL SPECIFICATIONS

The housing and the distributor of the pumps TPV-TPVT 4300 are made in cast iron.
The flow rate is proportional to the rotation speed and the displacement is continuously variable. It increases as the swash-plate angle moves from "0" to maximum position.
If the swash-plate is positioned out of the neutral position, the flow respectively follows one of the two directions.

Key features

- compact design
- integrated optionals
- high power to weight ratio
- low noise integrated boost pump

Typical applications

- construction equipments
- green mowers
- zero turn machines
- agricultural machines
- utility vehicles
- forest vehicles
- logistic machines

PUMP MODEL		TPV 32	TPV 38	TPV 45	TPV 50
Theorical max. displacement	cm^3/n	32	38	45	50
Flow rating(1)	l/min	115	137	162	180
Power rating(1)	kW	48	57	67,5	75
Boost pump displacement	cm^3/n	14			
Rated pressure	MPa	28			
Max. pressure	MPa	32			
Boost pressure(2)	MPa	1,5-2,6			
Absolute suction pressure(3)	MPa	> = 0,08			
Max. case pressure	MPa	0,15			
Minimum speed	n/min	700			
Rated speed	n/min	3.600			
Max. speed	n/min	3.900			
Max. fluid temperature	°C	80			
Fluid viscosity	cSt	15-35			
Fluid contamination		19/17/14 ISO 4406 (NAS 8)			
Mass (single pump with hydr-servo)	kg	24			
Mass (tandem pump with hydr-servo)	kg	49,5			

(1) $[V_{max} - \eta_{max}]$
(2) 1.500 n/min
(3) v <= $30mm^2/s$

SYSTEM DESIGN PARAMETERS

HYDRAULIC MEASURE	USEFUL FORMULAS	CONVERSION FACTORS
Flow rate: Q = (l/min)	**Q** = V [cm³/n] x η_v x n 10^{-3}	1 l/min = 0,2641 US Gal/min
Pressure: P = (MPa)		1 MPa = 145 PSI
Displacement: V = (cm³/n)		
Torque: M = (Nm)	**M** = $\frac{\Delta p\ [MPa] \times V\ [cm^3/n]}{6.283 \times \eta_m}$	1 Nm = 8,851 in lbs
Power: P = (kW)	**P** = $\frac{\Delta p\ [MPa] \times V\ [cm^3/n] \times n}{60 \times 1000 \times \eta_t}$	1 KW = 1,36 HP
Shaft speed: n = n/min		
Hydraulic efficiency: = ηv		
Mechanical efficiency: = ηm		
Overall efficiency: = ηt		
		1 mm = 0,0394 in
		1 kg = 2,205 lbs
		1 N = 0,2248 lbs

PERFORMANCE DIAGRAM

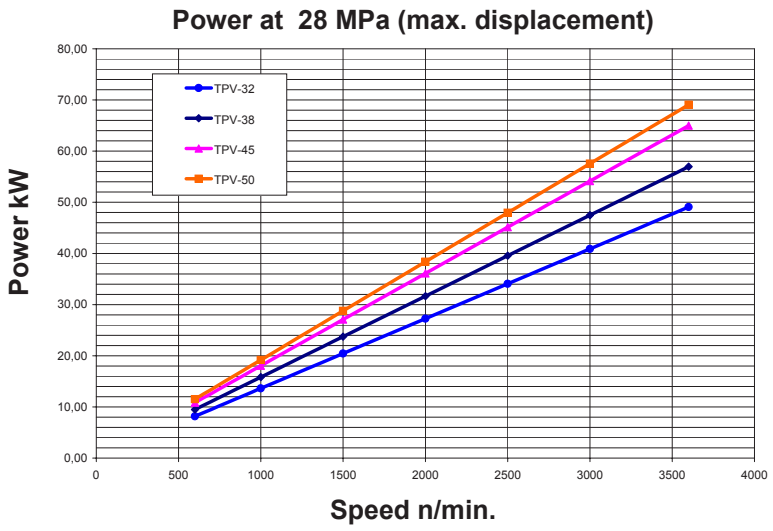

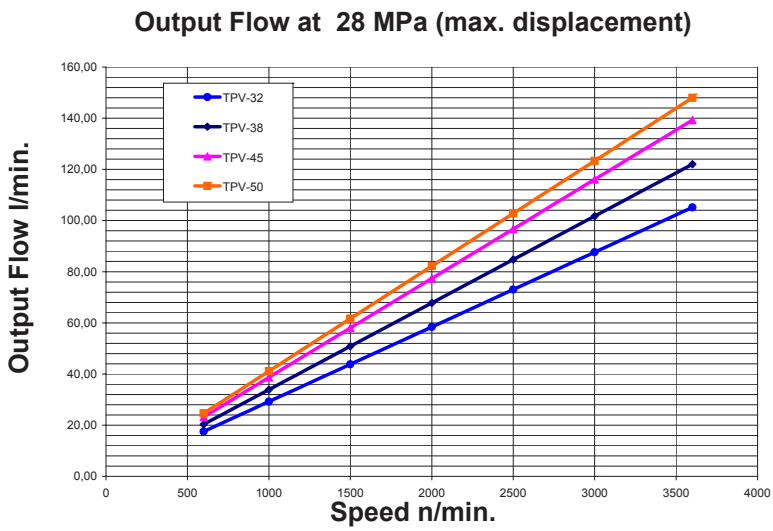

Performance diagrams

- The diagrams show the data of maximum speed and maximum continues pressure.
- Data may vary depending on pump displacement.

Pressure

- Continuous pressure: is the average pressure for continuous work, which must not be exceeded, to ensure a correct and long lasting service of the pump.
- Maximum pressure: is the maximum allowable pressure for short periods and must never be exceeded.

Speed

- Continuous work speed: is the maximum recommended speed for continuous operation of the pump under full load.
- Maximum speed: is the maximum permissible speed for the pump for short periods and not fully loaded. The use of the pump with this speed can reduce the life and cause a loss of power or of the hydrostatic braking capacity.

Caution

Any damage caused to the pump can reduce or eliminate the hydrostatic braking capacity. It is therefore necessary to provide an auxiliary braking system capable of stopping and supporting the weight of the complete machine, in the event of loss of hydrostatic power.

INSTALLATION INSTRUCTIONS

Standards for the installation, start up and maintenance

- When mounting the pump above the minimum level of the tank, distance of the highest point of the pump over the oil level MUST NOT exceed 250 mm.

- To reduce the noise level typical of all piston pumps we recommend:
  - use hoses instead of pipes
  - limit to a minimum the length of eventual pipes
  - fix rigid pipe sections with special supports equipped with rubber vibration dampening devices
  - use pipes and hoses with a diameter according to the speed values below:

Suction line = 0,6 ÷ 1,2 m / s
Drain = 1,5 ÷ 3,6 m / s
Pressurized lines = max 6 m / s

- To calculate the speed of the oil in the lines refer to the formula below:

V = Q * 21,22 / D
V = speed (m/s)
Q = flow rate (l/min)
D = internal pipe/hose diameter (mm)

- In any case NEVER use pipes/hoses or fittings with diameter smaller than that of the corresponding ports on the pump. This indication is ABSOLUTELY OBLIGATORY for the drain line to avoid to pressurize the pump housing and extrude the lip seal of the pump shaft.
- During mounting cure the alignment of the pump, concentric with the drive shaft sleeve to prevent overloading of the bearing. See page 10.
- For the hydraulic system, we recommend using pipes/hoses washed internally with hydraulic oil or, even better, with solvent.
- Special care must be taken when cleaning the inside of the tank (painting is recommended after sand blasting).
- To improve the functionality of the boost pump, it is recommended to place it below minimum tank level.
- The pumps can be installed in any direction and position.
  For further information contact our Technical Department.

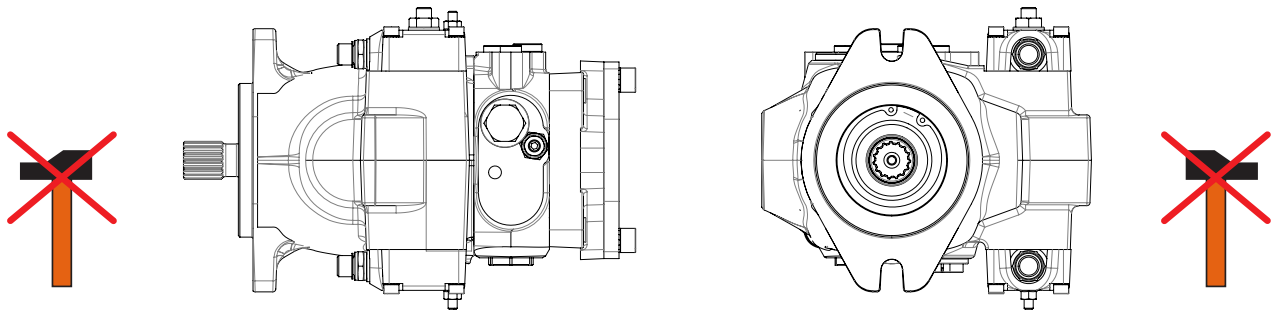

(continued)

INSTALLATION INSTRUCTIONS

Shaft Coupling

To connect the pump shaft to the engine flywheel or electric motor shaft use a flexible

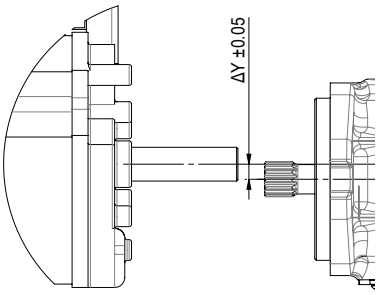

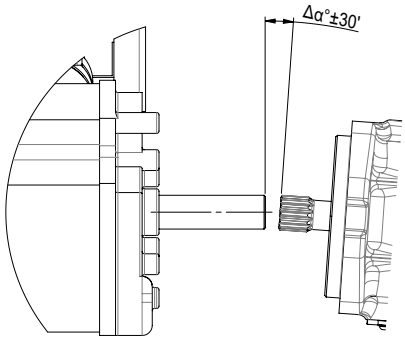

coupling. The alignment must be within the tolerances indicated in the figures above. For an optimal function of the pump the shaft should not be subjected to radial or axial loads. During the installation or removal, do not force the coupling of the pump shaft, but always use the threaded hole on the shaft.

Start up

- Before starting fill the tank and the other components with new filtered oil. You should run a flushing of the complete hydraulic system (see Use and Maintenance Manual). Check that the low pressure value is correct (refer to the Use and Maintenance Manual).
- Restore the oil level in the tank.

Maintenance

- The first oil change should be made after 500 hours of operation. Later change the oil every 2000 hours.
- The first replacement of the filter cartridge has to be made after 50 hours for a preliminary circuit cleaning. Then after further 500 hours.
- These frequencies have to be reduced in the case where the indicator shows the clogging of the filter cartridge and in case of operation in environments with a high level of contamination.

CAUTION

- Always work with the utmost attention to the moving parts; do not use loose or fluttering clothing.
- Do not approach rotating wheels, tracks, chains or shafts if not properly protected, or when they may start moving without notice.
- Do not loosen or disconnect fittings and pipes/hoses while the engine is running.
- Avoid oil leaks in order to prevent environmental pollution.

Load capacity of rear shaft (through drive shaft)

- The rear shaft is not able to carry radial loads.

HYDRAULIC FLUID

Viscosity

The maximum duration and the maximum efficiency are related to the optimum range of viscosity.
Optimal operating viscosity 15 ÷ 40 cSt referred to the temperature of the closed circuit.

Working conditions

For working conditions apply the following limits:
Minimum viscosity = 10 cSt for short moments and with the maximum temperature of the drain oil at 90 °C.
Max. viscosity = 1000 cSt for a few seconds, only during cold starting.

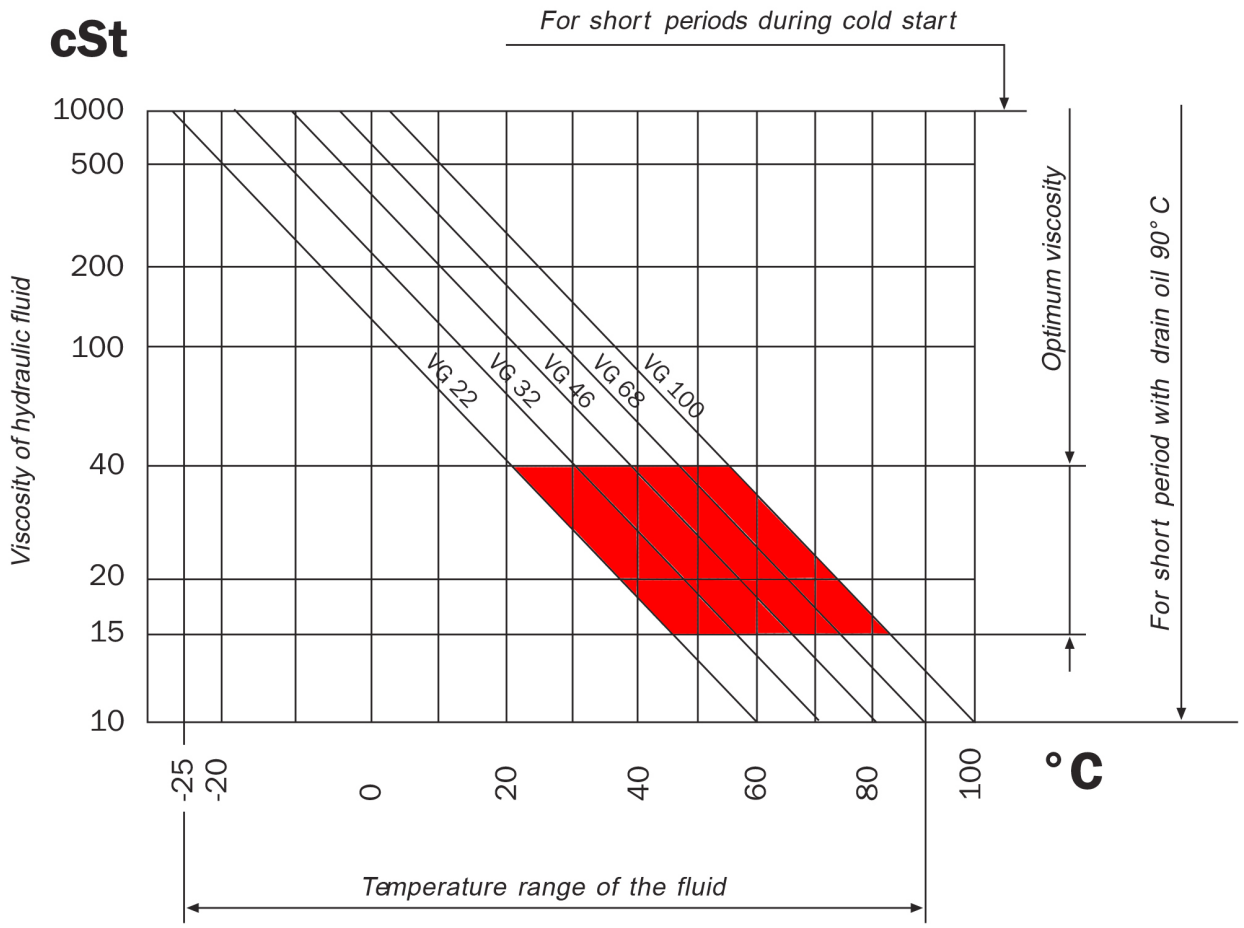

HANSA - TMP cannot be held responsible concerning non compliance of these instructions and observance of safety regulations, although not covered by this document.

HYDRAULIC FLUID FILTRATION

The contaminating particles suspended in the hydraulic fluid cause the wear of the hydraulic mechanisms moving parts.
On hydraulic pumps these parts operate with very small dimensional tolerances.
In order to prolong the parts life, it is recommended to use a filter that maintains the hydraulic fluid contamination class at max.

8 according to NAS 1638
5 according to SAE, ASTM, AIA
19/17/14 according to ISO 4406

According to the type of application decided for the pump, it is necessary to use filtration elements with a filtration ratio of:

$$ß_{(X)}\ 20 \div 30 \geq 75$$

making sure that this ratio does not worsen together with the increasing of the filter cartridge differential pressure. While the pump is working, its temperature increases (over 80° to 110°C) with negative effects on pump performances; as a consequence, it is important to observe a max. contamination level of:

7 according to NAS 1638
4 according to SAE, ASTM, AIA
18/16/13 according to ISO 4406

If these values cannot be secured, the component life will consequently be reduced and it is recommended to contact our Tech. Dept.

Suction filters

The suction filters must have a clogging indicator and bypass. The max. pressure drop of the filtration element must not exceed 0,04 absolute MPa (0,08 absolute MPa with cold start).

Filter assembling

The suction filter is mounted in the suction line. Check that the pressure before the boost pump is 0,08 absolute MPa, measured on the pump suction port (0,05 MPa for cold starting).

TPV 4300

VARIABLE DISPLACEMENT AXIAL PISTON PUMP

ORDER CODE

4300 0	TPV 1	32 2	CR 3	SS5 4	F2.2 5	SHI 6	OA 7	15 8	14 9	SA 10	000 11	SB 12

		Pag.
	0 - Pump series	
4300	= TPV pump 4300	
	1 - Pump model	
TPV	= Closed loop circuit pump	
	2 - Pump displacement pump	
	32 = 32 cm³/n **38** = 38 cm³/n **45** = 45 cm³/n **50** = 50 cm³/n	
	3 - Pump rotation	
CR	= Clockwise Rotation (right)	
CC	= Counter-clockwise rotation (left)	
	4 - Shaft (mounting side)	
SS3	= Splined shaft Z13 - 16/32 D.P	**17**
SS5	= Splined shaft Z15 - 16/32 D.P	**17**
	5 - Mounting side flange	
F2.2	= SAE-B 2 holes - pilot diam. 101,6 mm.	**17**
	6 - Control devices	
SHI	= Hydraulic servo control	**18**
SEI1.4	= Electro-proportional servo control 12V DC (AMP junior timer connector)	**20**
SEI2.4	= Electro-proportional servo control 24V DC (AMP junior timer connector)	**20**
SEI1.4D	= Electro-proportional servo control 12V DC (Deutsch connector)	**23**
SEI2.4D	= Electro-proportional servo control 24V DC (Deutsch connector)	**23**
SE-CA1	= Open center on-off electric servo control 12 V DC (AMP Junior Timer connector)	**26**
SE-CC1	= Closed center on-off electric servo control 12 V DC (AMP Junior Timer connector)	**27**
SE-CA1D	= Open center on-off electric servo control 12 V DC (Deutsch connector)	
SE-CC1D	= Closed center on-off electric servo control 12 V DC (Deutsch connector)	
SE-CA2	= Open center on-off electric servo control 24 V DC (AMP Junior Timer connector)	
SE-CC2	= Closed center on-off electric servo control 24 V DC (AMP Junior Timer connector)	
SE-CA2D	= Open center on-off electric servo control 24 V DC (Deutsch connector)	
SE-CC2D	= Closed center on-off electric servo control 24 V DC (Deutsch connector)	
SHIX	= Hydraulic servo control with feed back	**28**
SMIX	= Mechcanical lever servo control with feed back	**30**
SEIX1.2	= Electro-proportional servo control with feed back 12V DC (AMP junior timer connector)	**32**
SEIX2.2	= Electro-proportional servo control with feed back 24V DC (AMP junior timer connector)	**32**
SEIX1.2D	= Electro-proportional servo control with feed back 12V DC (Deutsch connector)	**35**
SEIX2.2D	= Electro-proportional servo control with feed back 24V DC (Deutsch connector)	**35**

(continued)

ORDER CODE

7 - Control devices position

OA = Position A

8 - Relief valve settings

15 = 15 MPa	**18** = 18 MPa	**20** = 20 MPa
25 = 25 MPa	**30** = 30 MPa	**35** = 35 MPa

9 - Boost pump

00 = Without boost pump *
14 = Standard boost pump 14 cm^3/n - pressure 2 MPa (1000 n/min)
14XX = Boost pump 14 cm^3/n - pressure 2 ÷ 3 MPa (1000 n/min) please contact our Tech. Dept.

* Upon order, please provide information on maximum external charge flow.

10 - Rear pump connection options

SA = SAE-A 4 holes mounting flange (female shaft) **38**
SB = SAE-B 2 holes mounting flange (female shaft) **38**
C-SA = Closed (without rear fitting) **39**

11- Auxiliary gear pump displacements

000 = Without pump

Group 2 SAE A

204 = 4,2 cm^3/n	**206** = 6,0 cm^3/n	**209** = 8,4 cm^3/n	**211** = 10,8 cm^3/n
214 = 14,4 cm^3/n	**217** =16,8 cm^3/n	**219** =19,2 cm^3/n	**222** = 22,8 cm^3/n
226 = 26,2 cm^3/n	**230** = 30,0 cm^3/n	**240** = 40,0 cm^3/n	

Group 3 SAE B

315 = 15,0 cm^3/n	**318** = 18,0 cm^3/n	**321** = 21 cm^3/n	**327** = 27,0 cm^3/n
332 = 32,0 cm^3/n	**338** = 38,0 cm^3/n	**343** = 43,0 cm^3/n	**347** = 47,0 cm^3/n
351 = 51,0 cm^3/n	**354** = 54,0 cm^3/n	**361** = 61,0 cm^3/n	**364** = 64,0 cm^3/n
370 = 70,0 cm^3/n	**374** = 74,0 cm^3/n	**390** = 90,0 cm^3/n	

12 - Optional

00 = Without optional
SB = Screw by-pass (Standard) **40**
FR = Pre-arranged for connection with external filter **41**
MOB (SHI) = Man on board with SHI Hydraulic servo control **42**
MOB (SEI) = Man on board with SEI Electro-proportional servo control **44**
CO (--) = Pressure cut-off valve (pressure setting) **46**
G/J/M/- = Port threads and restrictor diameter

	Servo control type	Port threads	Symbol
STANDARD	SEI	Plugged	-
	SHI	1/4" BSPP	G
ON REQUEST	SHI	JIC (7/16" - 20)	J
	SHI	METRIC (M12x1,5)	M

Restrictor diameter (SHI/SEI)	
-	Without restrictor
06	Restrictor orifice ø 0,6 mm
08	Restrictor orifice ø 0,8 mm
10	Restrictor orifice ø 1,0 mm
12	Restrictor orifice ø 1,2 mm
16	Restrictor orifice ø 1,6 mm
20	Restrictor orifice ø 2,0 mm

Example G/08 = 1/4" BSPP port threads and Ø 0,8 mm restrictor (SHI)
Example -/08 = Ø 0,8 mm restrictor (SEI)

GENERAL DIMENSIONS/PUMP PORTS

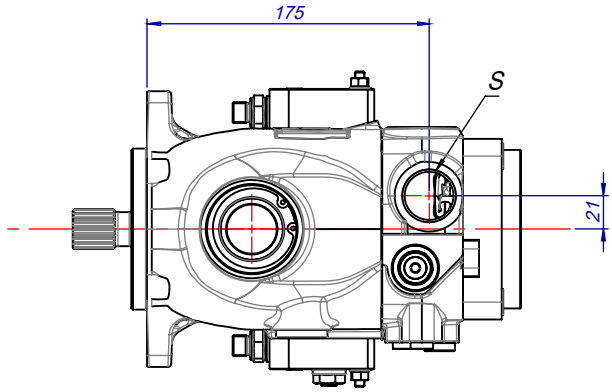

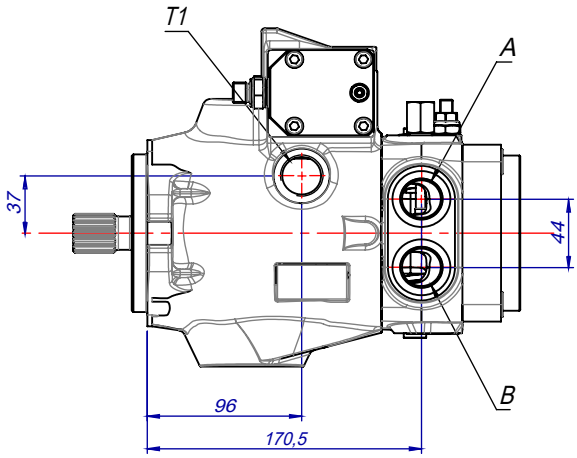

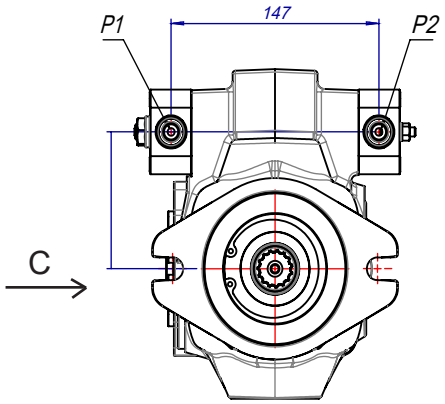

VIEW FROM C

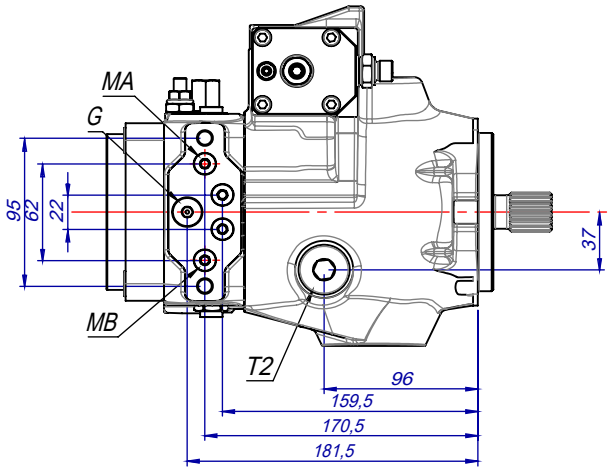

PORTS		
A - B	Main pressure ports	3/4" BSPP
T1 - T2	Drain	3/4" BSPP
S	Suction	1" BSPP
G	Boost pump pressure gauge port	1/4" BSPP
MA - MB	Pressure gauge ports	1/8" BSPP
P1 - P2	Pilot pressure	1/4" BSPP

SHAFT OPTION AND MOUNTING FLANGE

SS3

SPLINED SHAFT 13T

Norm SAE-B ANSI B92.2-1970 CLASS 5
Max. torque = 320Nm

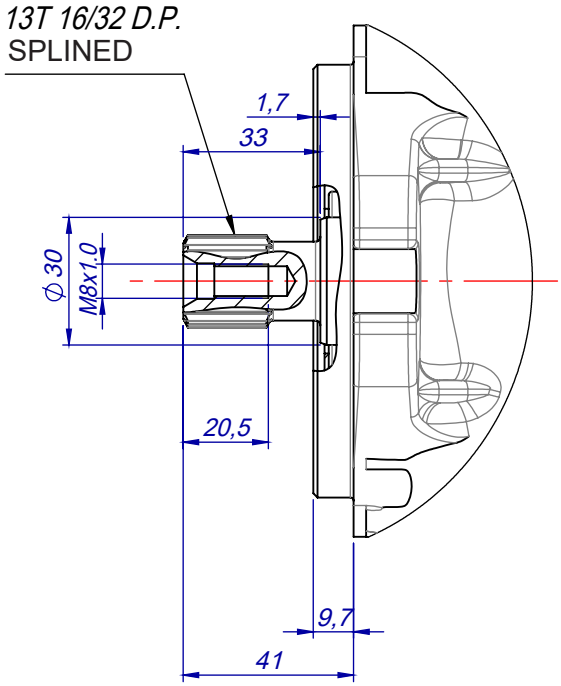

SS5

SPLINED SHAFT SAE-BB Z = 15

Max. torque = 450 Nm

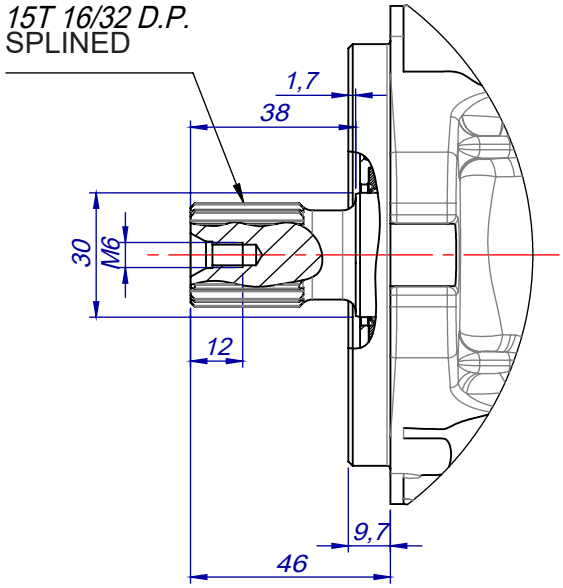

Caution: In case of multiple pump applications the total torque requested must be limited to the above value.

F2.2

FLANGE SAE-B - 2 BOLT

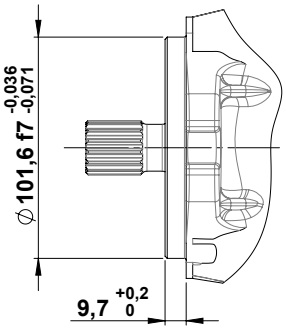

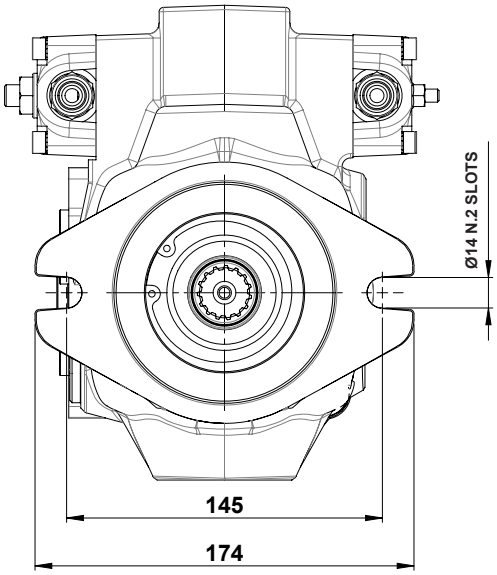

SHI

HYDRAULIC SERVO CONTROL

The pump displacement variation is obtained by adjusting the pressure on P1 and P2 servo control ports by means of a hydraulic proportional joystick (with integrated pressure reducing valves).
The servo control supply can be obtained by taking pressure from the boost pump (G port), see pag. 16.
The servo control return time can be adjusted by inserting a restrictor on the joystick supply line (0,5 ÷ 1,2 mm).
The servo control operation curve, in both directions, goes from 0,4 to 1,8 MPa (tolerance (± 5 %).
The adjusting curve of the hydraulic joystick has to be a little wider (0,3 ÷ 1,9 MPa).
Suggested curves for HPV series Joysticks: CR062 (see HT 73/B/105/0417/E catalogue).

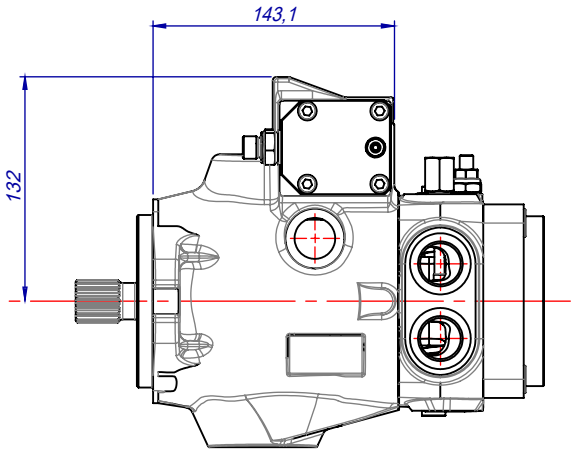

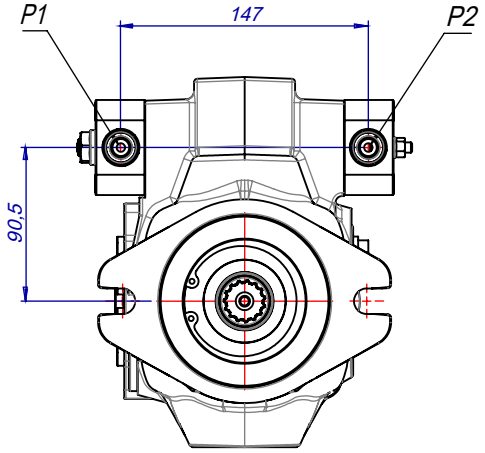

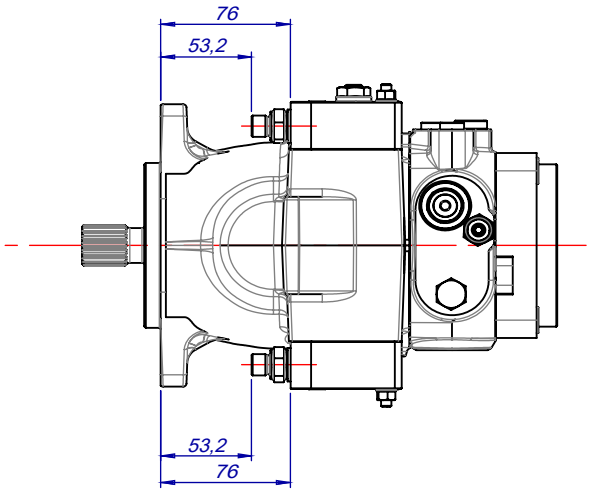

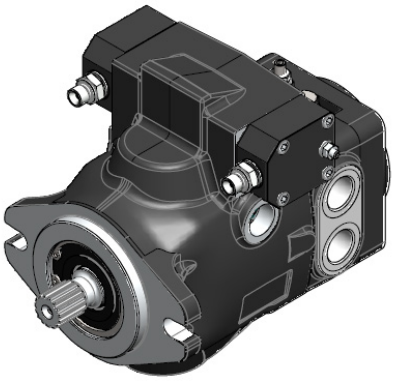

(continued)

SHI

HYDRAULIC SERVO CONTROL

HYDRAULIC DIAGRAM

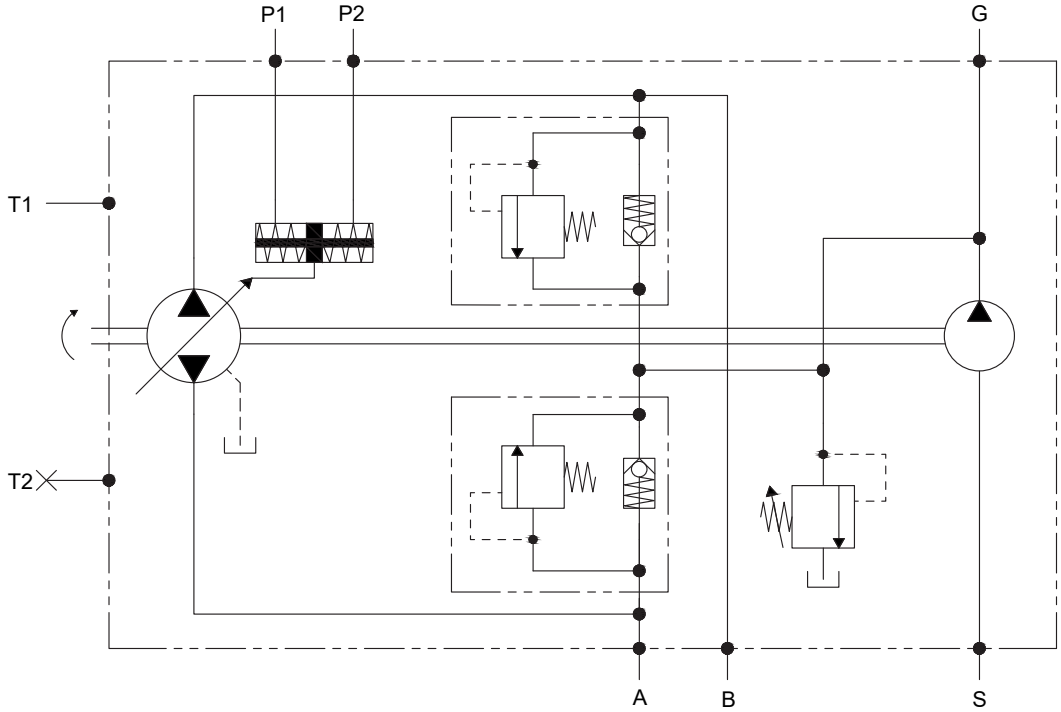

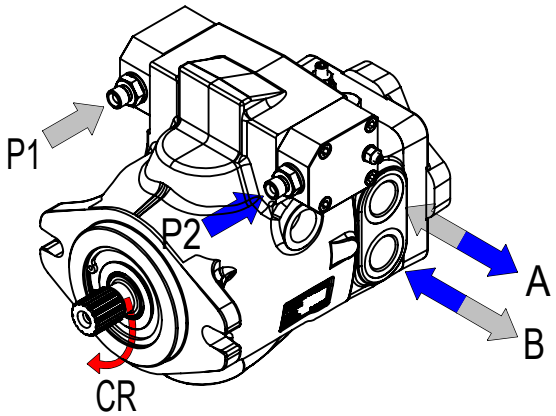

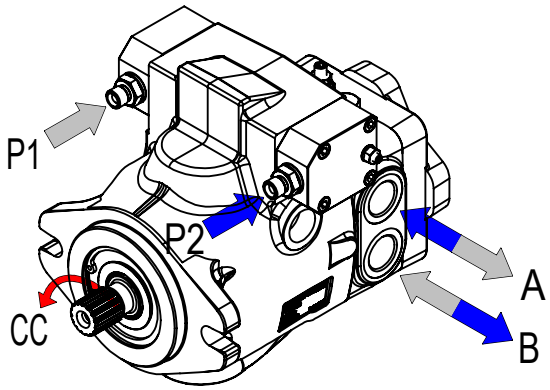

SEI 1.4 (12V DC)
SEI 2.4 (24V DC)

ELECTRO-PROPORTIONAL SERVO CONTROL

(AMP junior timer connector)

The pump displacement variation is obtained by an electric signal, which varies approx.:

- from 315 to 630 mA (24V DC voltage)
- from 630 to 1260 mA (12V DC voltage)

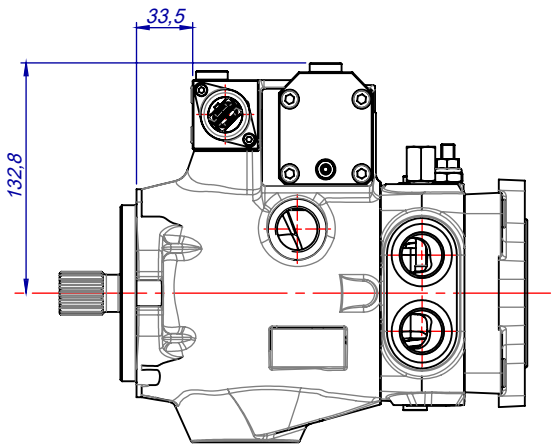

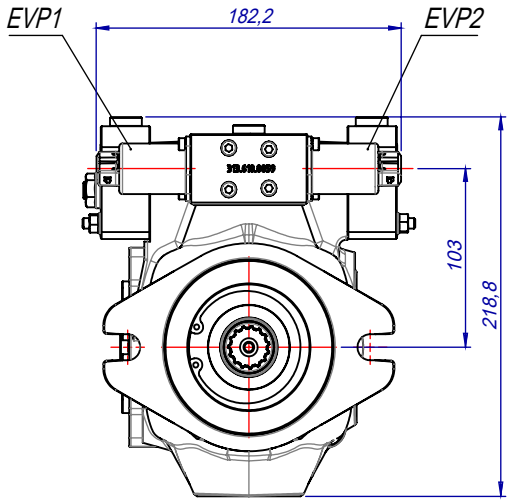

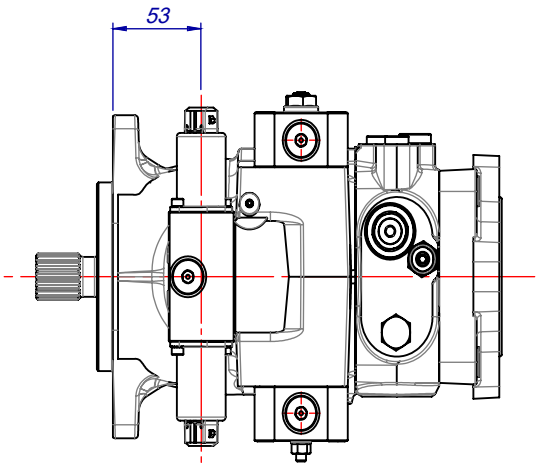

(continued)

SEI 1.4 (12V DC)
SEI 2.4 (24V DC)

ELECTRO-PROPORTIONAL SERVO CONTROL

(AMP junior timer connector)

HYDRAULIC DIAGRAM

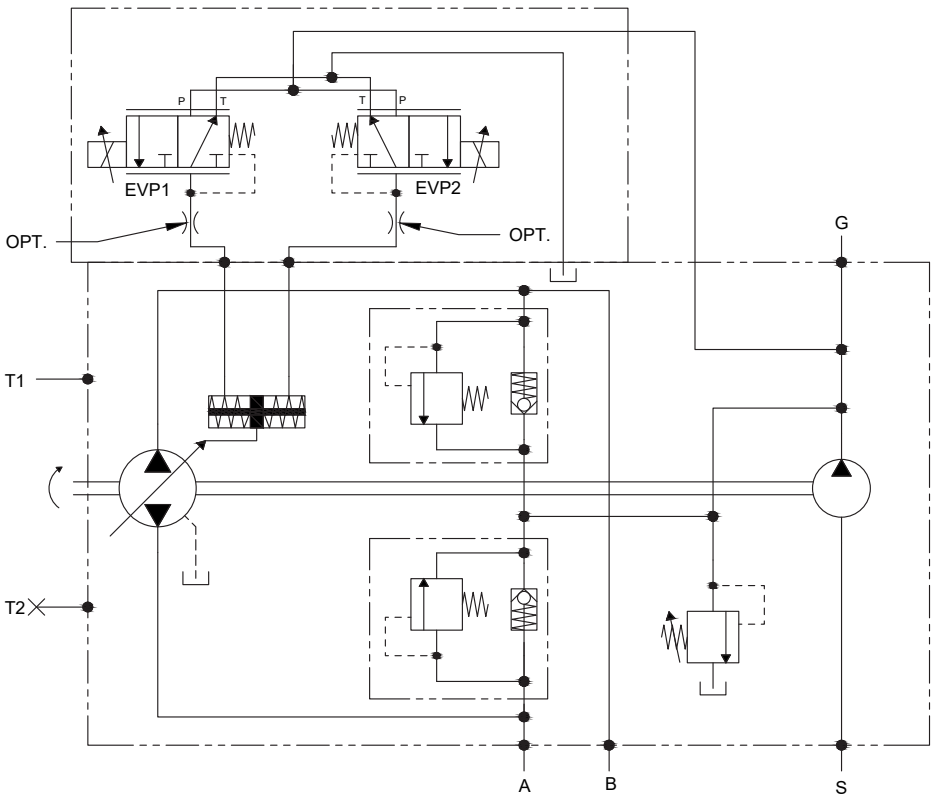

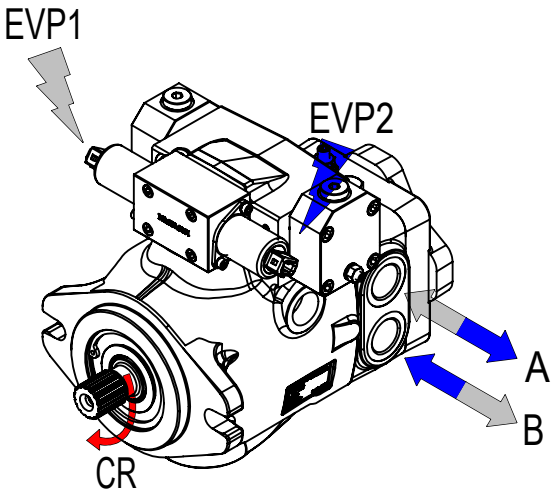

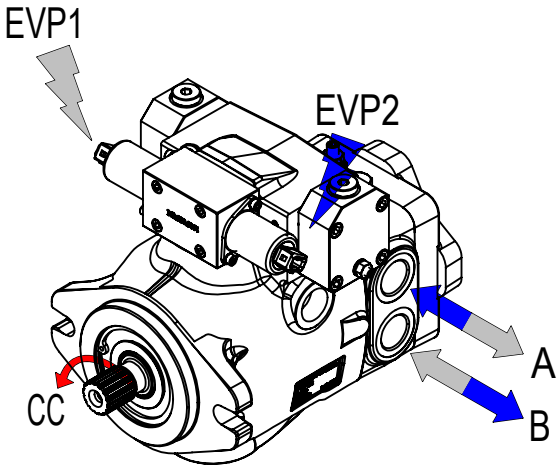

(continued)

SEI 1.4 (12V DC)
SEI 2.4 (24V DC)

ELECTRO-PROPORTIONAL SERVO CONTROL

(AMP junior timer connector)

CURRENT-DISPLACEMENT GRAPHIC

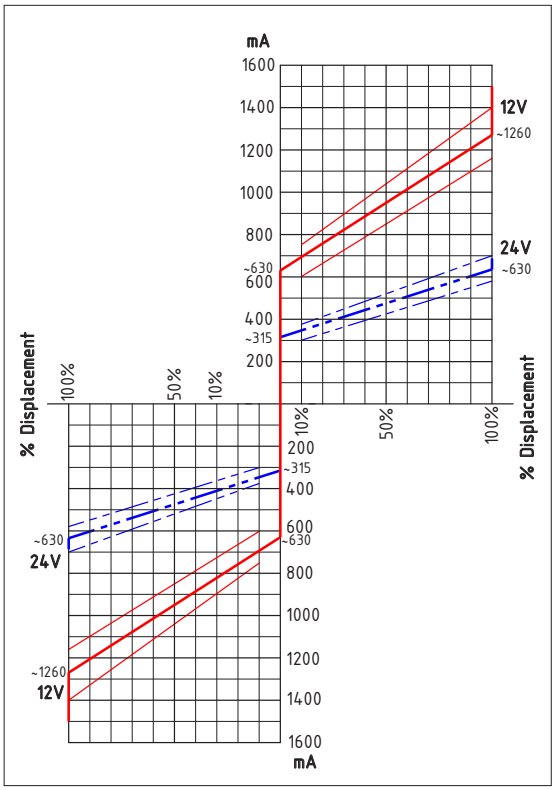

SOLENOID VALVE ELECTRICAL FEATURES		
Voltage	12 V DC	24 V DC
Electric current	1500 mA	750 mA
Load resistence	4,72 Ω ± 5%	20,8 Ω ± 5%
Type of control	Current control	
	PWM 100 Hz (suggested)	
Type of connection	AMP Junior Timer	
Protection class	Until IP6K6 / IPX9K	

SOLENOID VALVE HYDRAULIC FEATURES	
Max. pressure (P, T)	pP= 5 MPa, pT= 3 MPa
Hysteresis (w/PWM)	<0,07 MPa (pA=2,0)
	<0,1 MPa (pA=2,5)
	<0,15 MPa (pA=3,5)
Filtration ratio	125 µm
Oil contamination level	Min. filtration ratio: 20/18/15
	According ISO 4406
	Hydraulic oil DIN 51524
Min./max. oil temperature	From -20 to +90°C

SEI 1.4D (12V DC)
SEI 2.4D (24V DC)

ELECTRO-PROPORTIONAL SERVO CONTROL

(Deutsch connector)

The pump displacement variation is obtained by an electric signal, which varies approx.:

- from 315 to 630 mA (24V DC voltage)
- from 630 to 1260 mA (12V DC voltage)

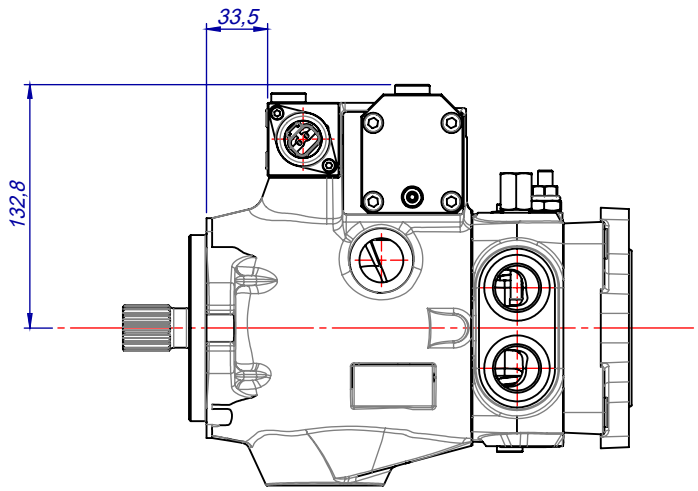

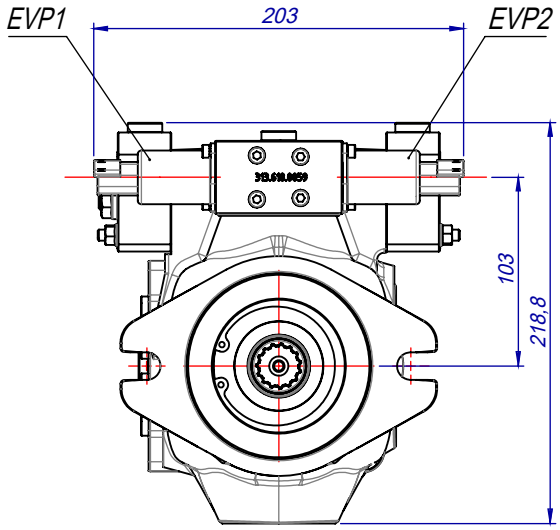

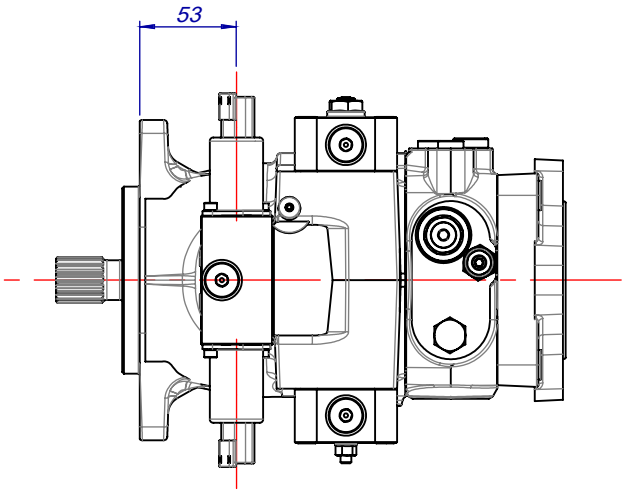

(continued)

SEI 1.4D (12V DC)
SEI 2.4D (24V DC)

ELECTRO-PROPORTIONAL SERVO CONTROL

(Deutsch connector)

HYDRAULIC DIAGRAM

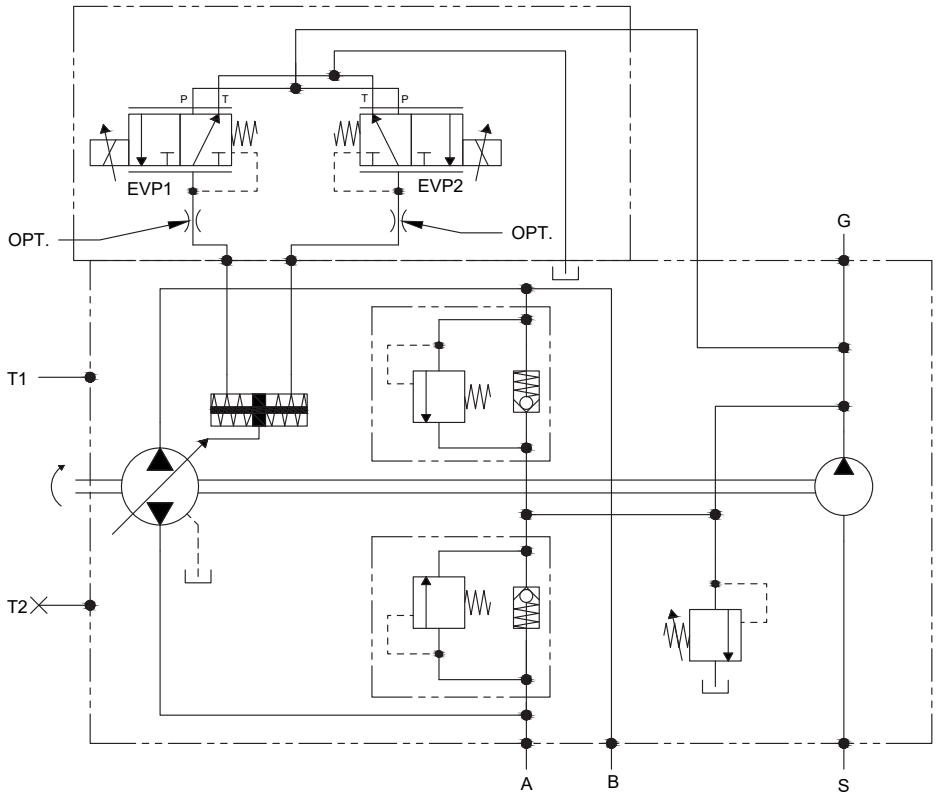

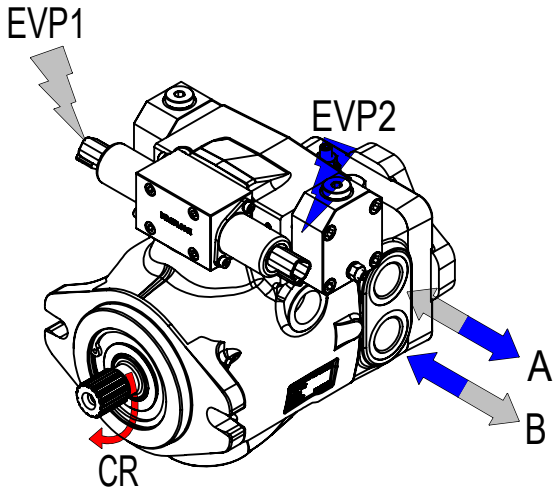

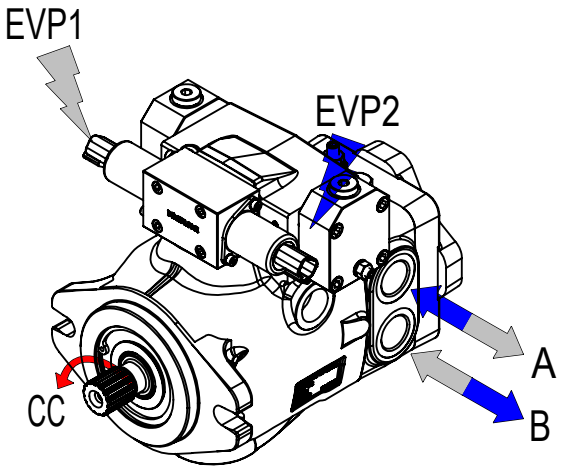

(continued)

SEI 1.4D (12V DC)
SEI 2.4D (24V DC)

ELECTRO-PROPORTIONAL SERVO CONTROL

(Deutsch connector)

CURRENT-DISPLACEMENT GRAPHIC

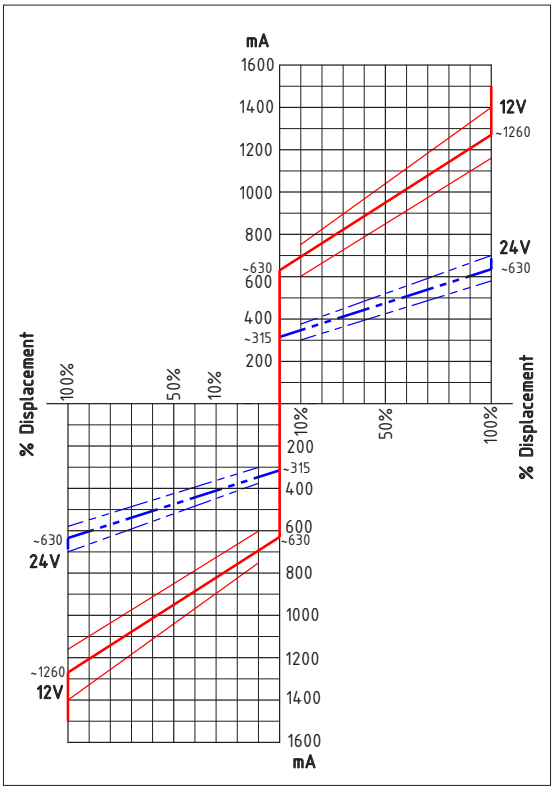

SOLENOID VALVE ELECTRICAL FEATURES		
Voltage	12 V DC	24 V DC
Electric current	1500 mA	750 mA
Load resistence	4,72 Ω ± 5%	20,8 Ω ± 5%
Type of control	Current control	
	PWM 100 Hz (suggested)	
Type of connection	DEUTSCH DT 04-2P	
Protection class	Until IP6K6 / IPX9K	

SOLENOID VALVE HYDRAULIC FEATURES	
Max. pressure (P, T)	pP= 5 MPa, pT= 3 MPa
Hysteresis (w/PWM)	<0,07 MPa (pA=2,0)
	<0,1 MPa (pA=2,5)
	<0,15 MPa (pA=3,5)
Filtration ratio	125 µm
Oil contamination level	Min. filtration ratio: 20/18/15
	According ISO 4406
	Hydraulic oil DIN 51524
Min./max. oil temperature	From -20 to +90°C

SE-CA (12V DC / 24V DC)

OPEN CENTER ON-OFF ELECTRIC SERVO CONTROL

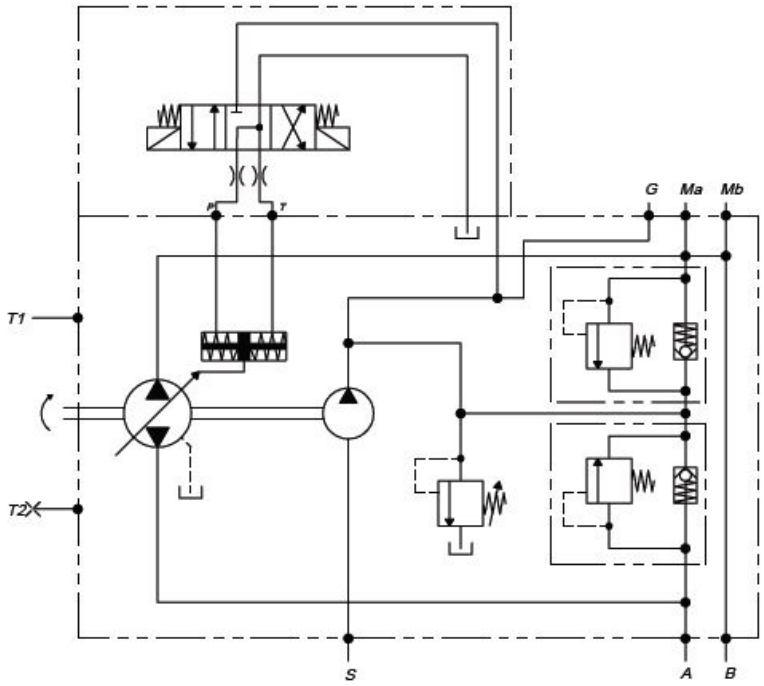

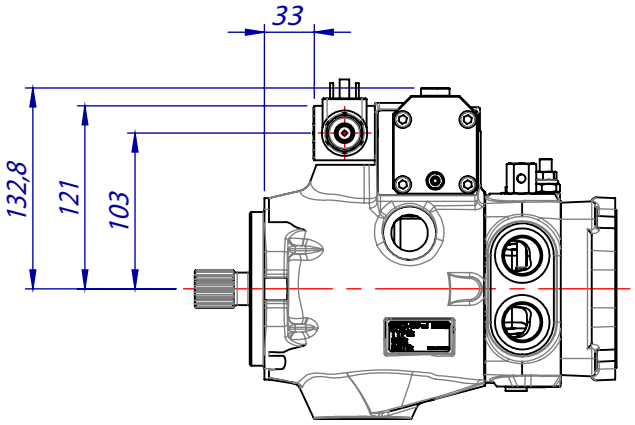

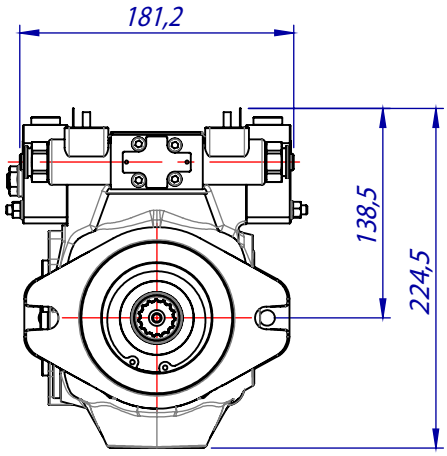

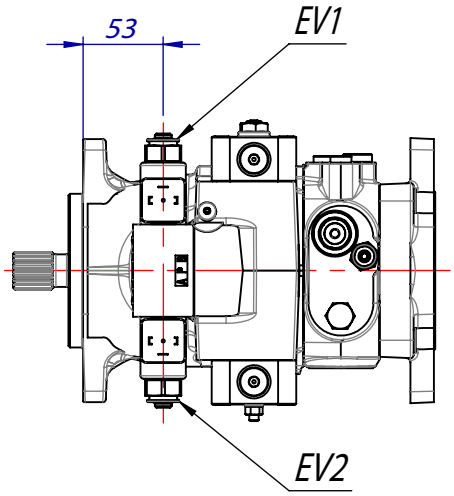

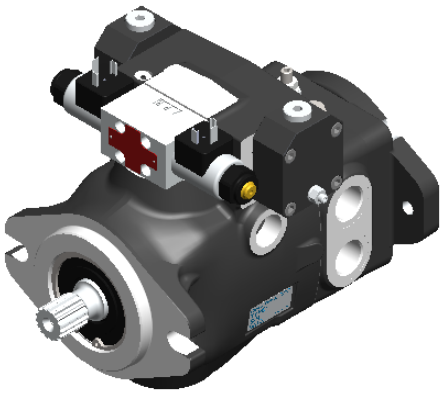

SE-CC (12V DC / 24V DC)

CLOSED CENTER ON-OFF ELECTRIC SERVO CONTROL

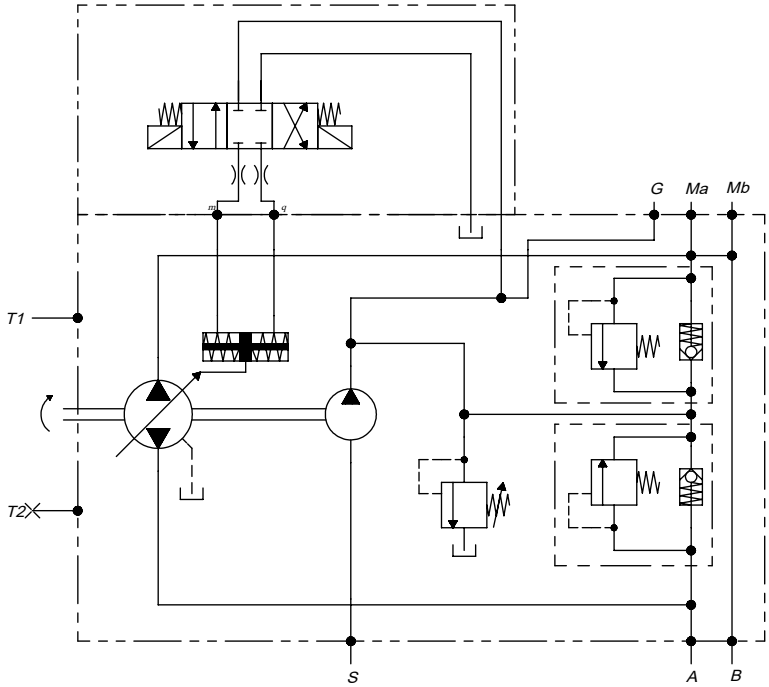

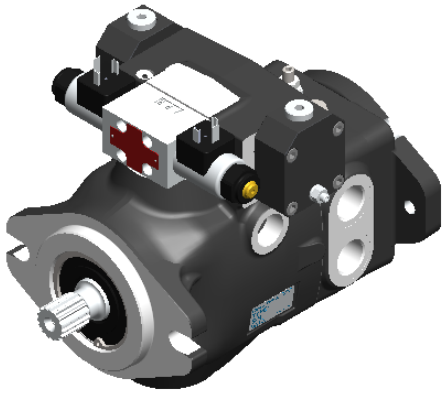

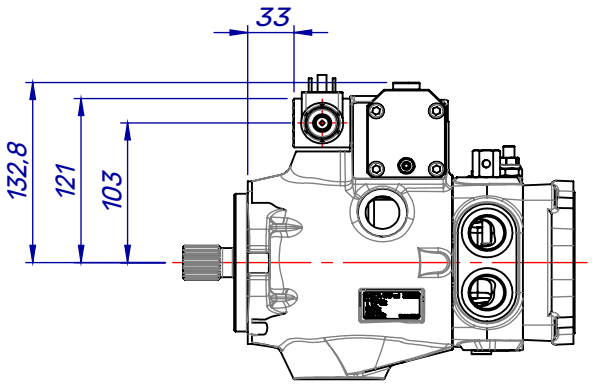

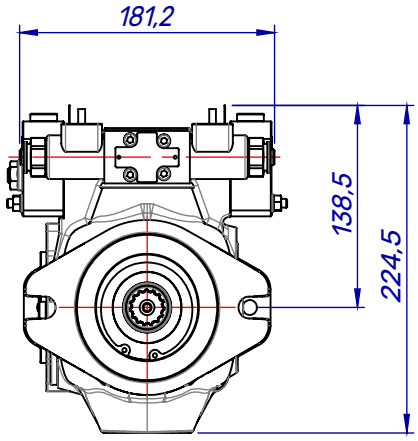

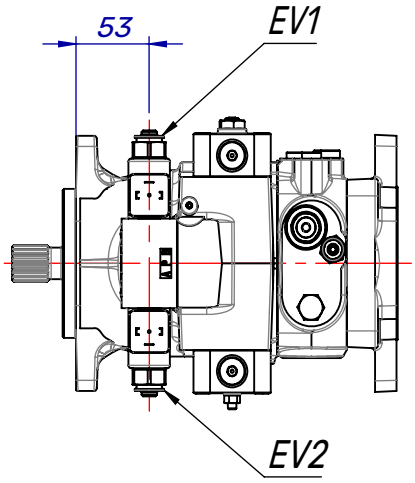

ORDER CODE	TYPE	VOLTAGE (V.)	CONNECTION
SE-CA1	Open Center	12	EN 1745301-803A
SE-CC1	Closed Center	12	EN 1745301-803A
SE-CA1D	Open Center	12	DEUTSCH DT04-2P
SE-CC1D	Closed Center	12	DEUTSCH DT04-2P
SE-CA2	Open Center	24	EN 1745301-803A
SE-CC2	Closed Center	24	EN 1745301-803A
SE-CA2D	Open Center	24	DEUTSCH DT04-2P
SE-CC2D	Closed Center	24	DEUTSCH DT04-2P

SHIX

HYDRAULIC SERVO CONTROL WITH FEED BACK

The pump displacement variation is obtained by adjusting the pressure on P1 and P2 servo control ports by means of a hydraulic proportional joystick (with integrated pressure reducing valves).
The servo control oil supply can be obtained by taking pressure from the boost pump (G port), see page 16.
The servo control return time can be adjusted by inserting a restrictor on the joystick supply line (0,5 ÷ 1,2 mm).

The servo control operation curve, in both directions, goes from 0,4 to 2 MPa (tolerance (± 5 %).
The adjusting curve of the hydraulic joystick has to be a little wider (0,3 ÷ 2,1 MPa).
Suggested curves for HPV series Joysticks: CR096 (see HT 73/B/105/0417/E catalogue).

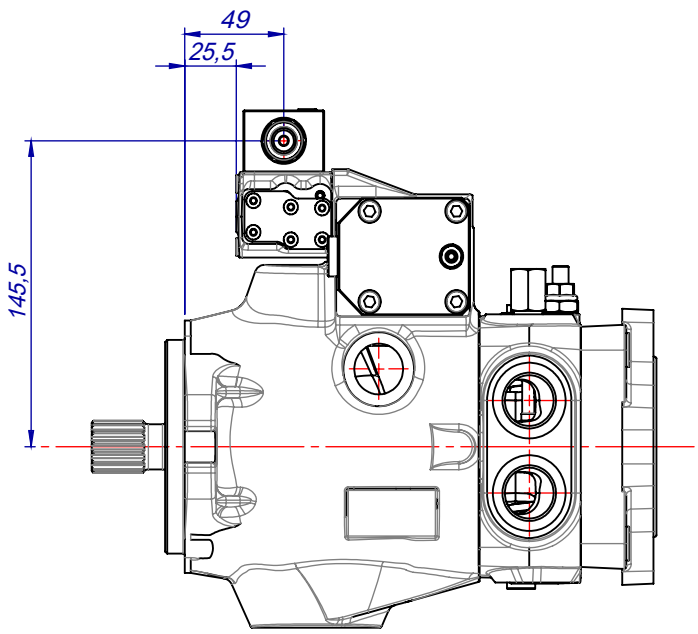

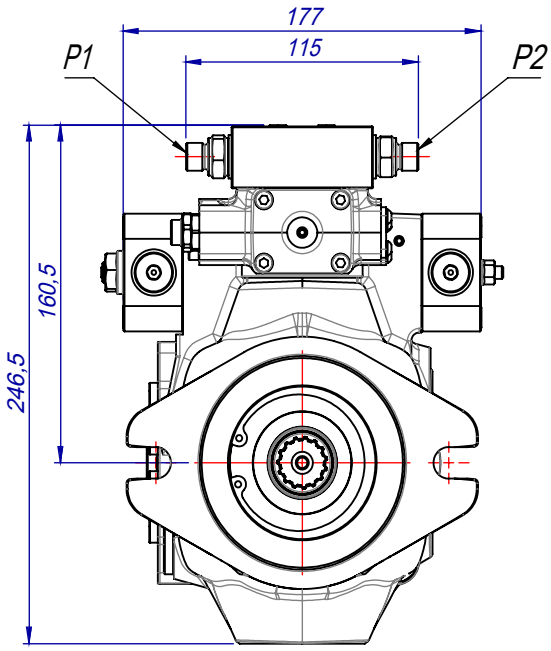

(continued)

SHIX

HYDRAULIC SERVO CONTROL WITH FEED BACK

HYDRAULIC DIAGRAM

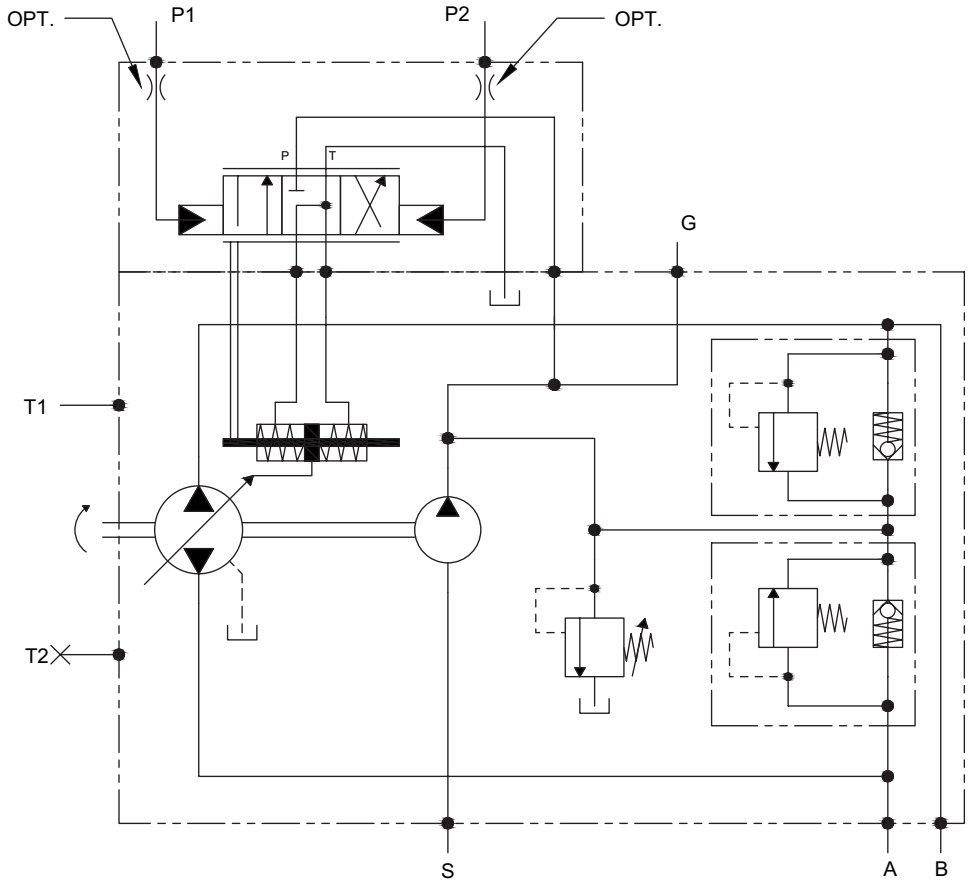

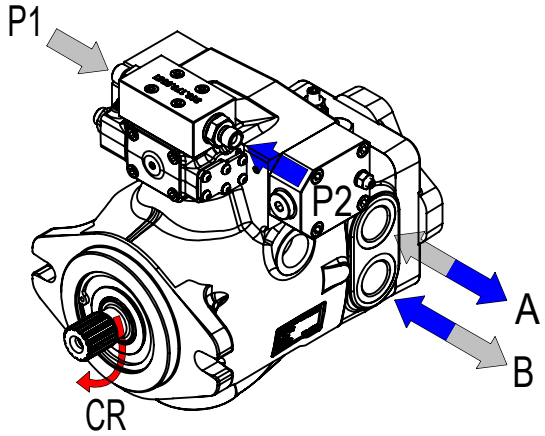

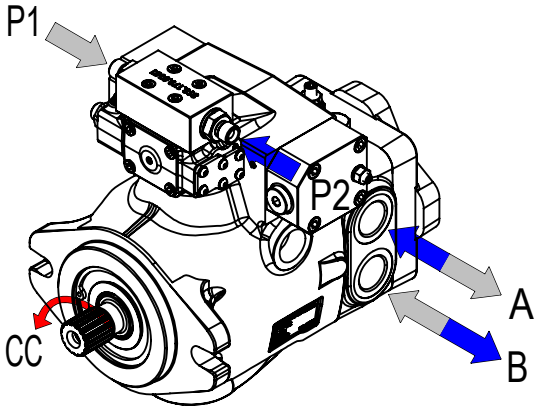

SMIX

MANUAL LEVER CONTROL WITH FEED BACK

The pump displacement variation is directly related to the angle position of the lever.

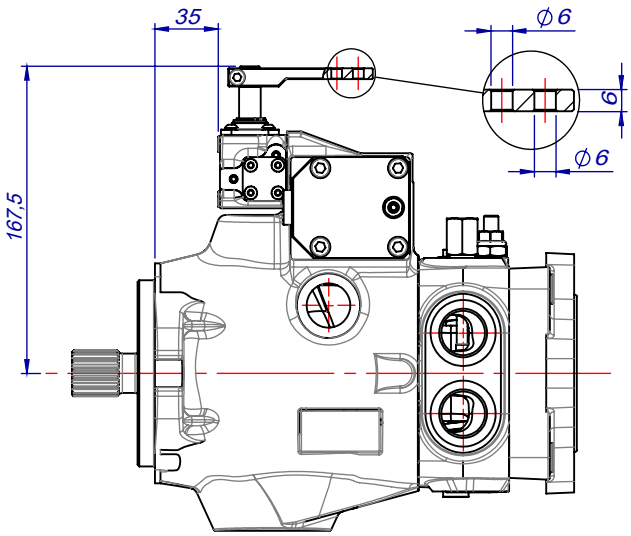

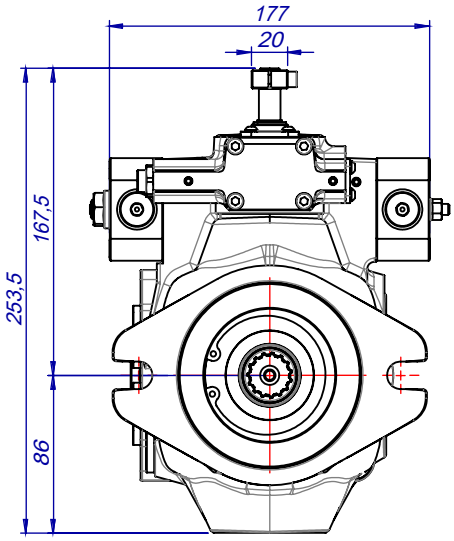

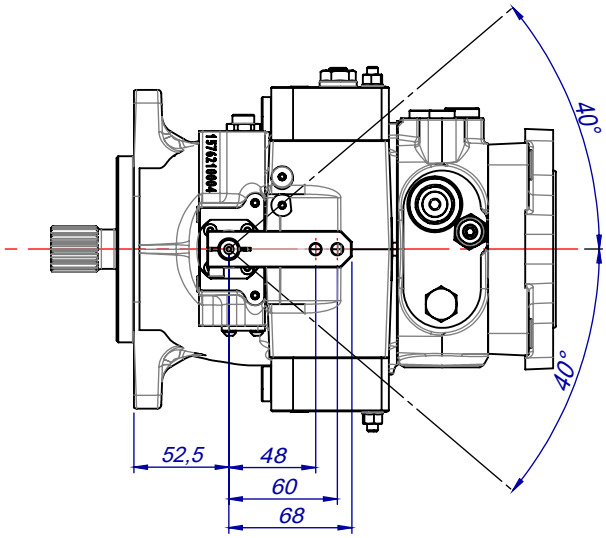

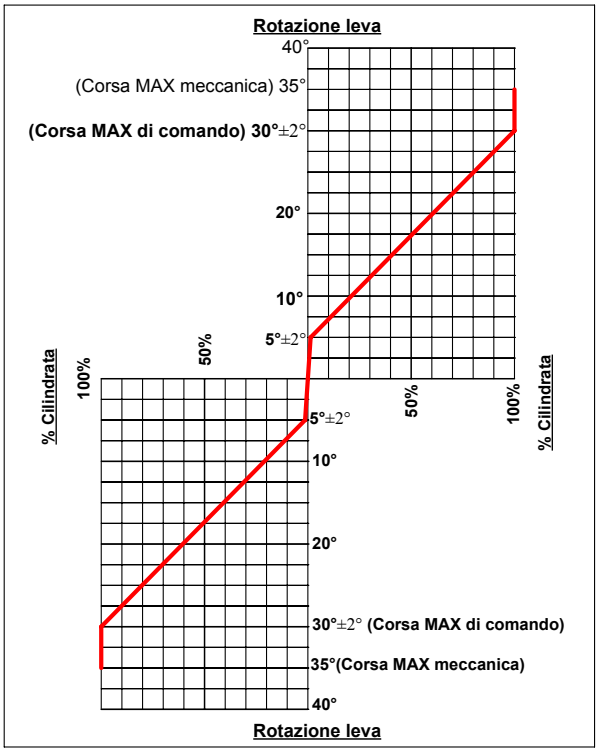

(continued)

SMIX

MANUAL LEVER CONTROL WITH FEED BACK

HYDRAULIC DIAGRAM

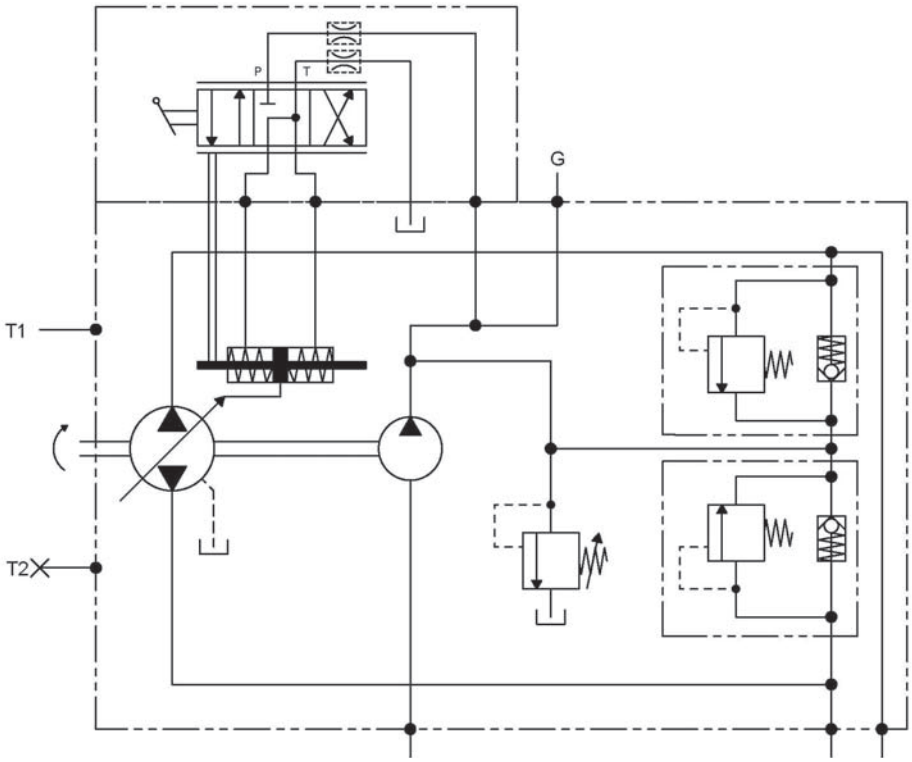

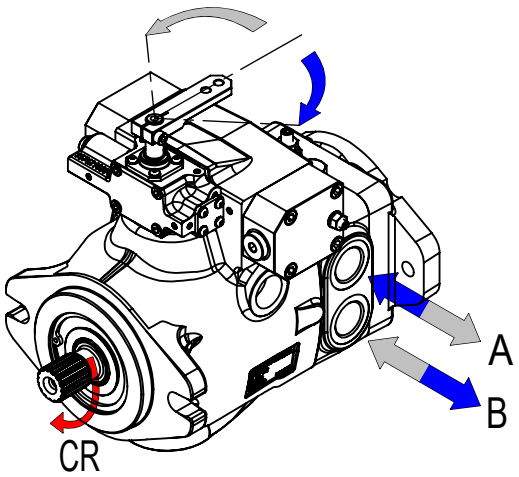

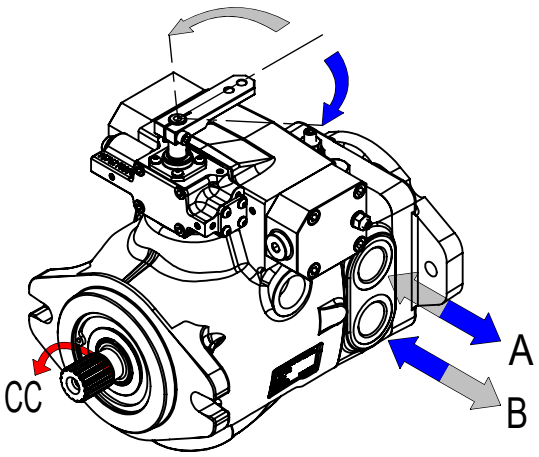

SEIX 1.2 (12V DC)
SEIX 2.2 (24V DC)

ELECTRO-PROPORTIONAL SERVO CONTROL WITH FEED BACK

(AMP junior timer connector)

The pump displacement variation is obtained by an electric signal, which varies approx.:

- from 315 to 630 mA (24V DC voltage)
- from 630 to 1260 mA (12V DC voltage)

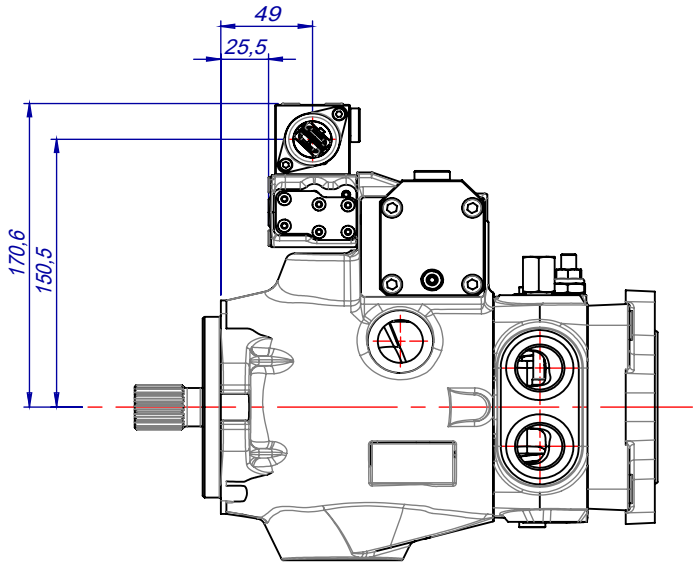

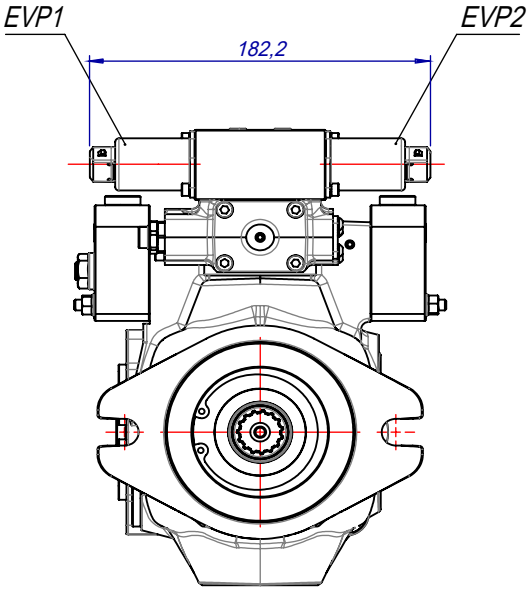

(continued)

SEIX 1.2 (12V DC)
SEIX 2.2 (24V DC)

ELECTRO-PROPORTIONALSERVOCONTROLWITHFEEDBACK

(AMP junior timer connector)

HYDRAULIC DIAGRAM

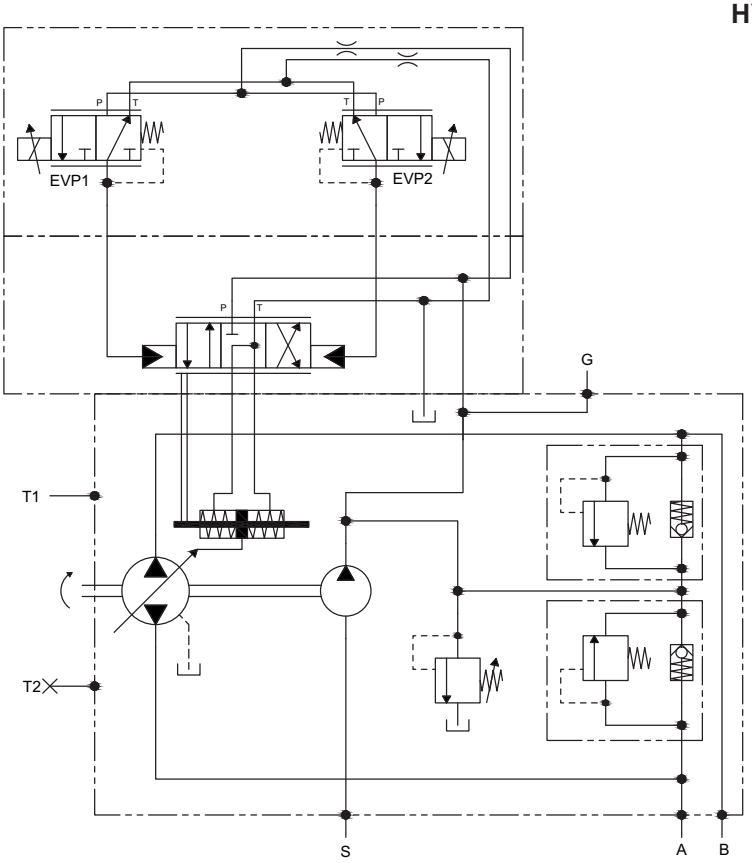

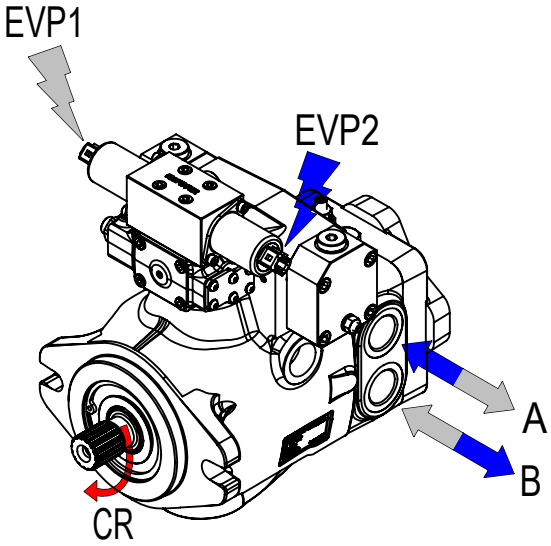

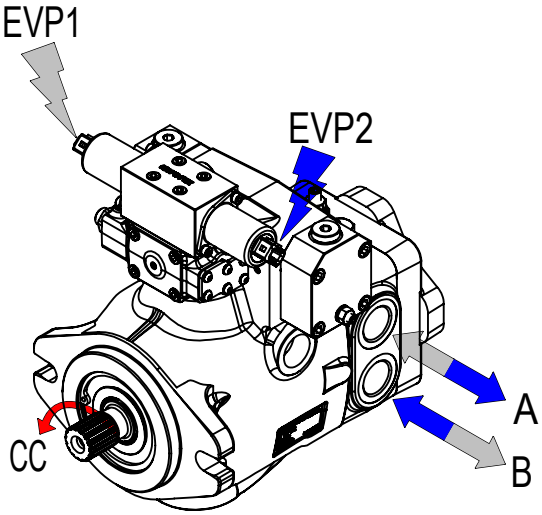

(continued)

SEIX 1.2 (12V DC)
SEIX 2.2 (24V DC)

ELECTRO-PROPORTIONAL SERVO CONTROL WITH FEEDBACK

(AMP junior timer connector)

CURRENT-DISPLACEMENT GRAPHIC

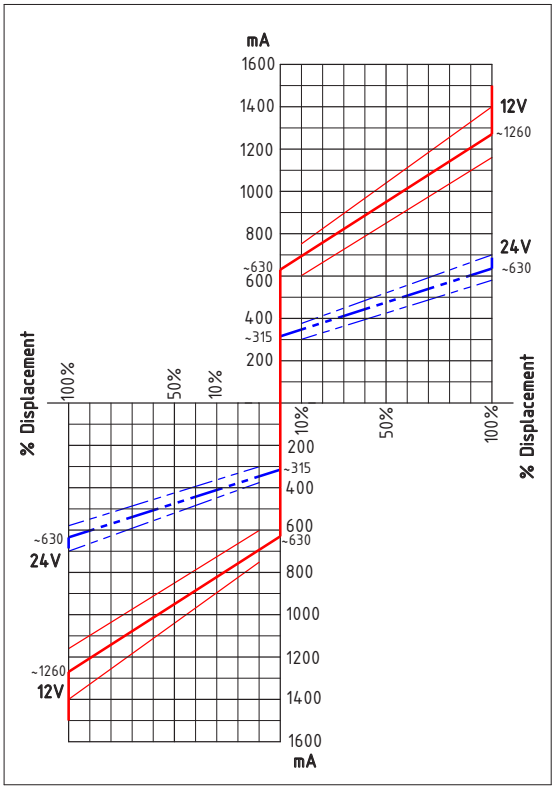

SOLENOID VALVE ELECTRICAL FEATURES		
Voltage	12 V DC	24 V DC
Electric current	1500 mA	750 mA
Load resistence	4,72 Ω ± 5%	20,8 Ω ± 5%
Type of control	Current control	
	PWM 100 Hz (suggested)	
Type of connection	DEUTSCH DT 04-2P	
Protection class	Until IP6K6 / IPX9K	

SOLENOID VALVE HYDRAULIC FEATURES	
Max. pressure (P, T)	pP= 5 MPa, pT= 3 MPa
Hysteresis (w/PWM)	<0,07 MPa (pA=2,0)
	<0,1 MPa (pA=2,5)
	<0,15 MPa (pA=3,5)
Filtration ratio	125 µm
Oil contamination level	Min. filtration ratio: 20/18/15
	According ISO 4406
	Hydraulic oil DIN 51524
Min./max. oil temperature	From -20 to +90°C

SEIX 1.2D (12V DC)
SEIX 2.2D (24V DC)

ELECTRO-PROPORTIONALSERVOCONTROLWITHFEEDBACK

(Deutsch connector)

The pump displacement variation is obtained by an electric signal, which varies approx.:

- from 315 to 630 mA (24V DC voltage)
- from 630 to 1260 mA (12V DC voltage)

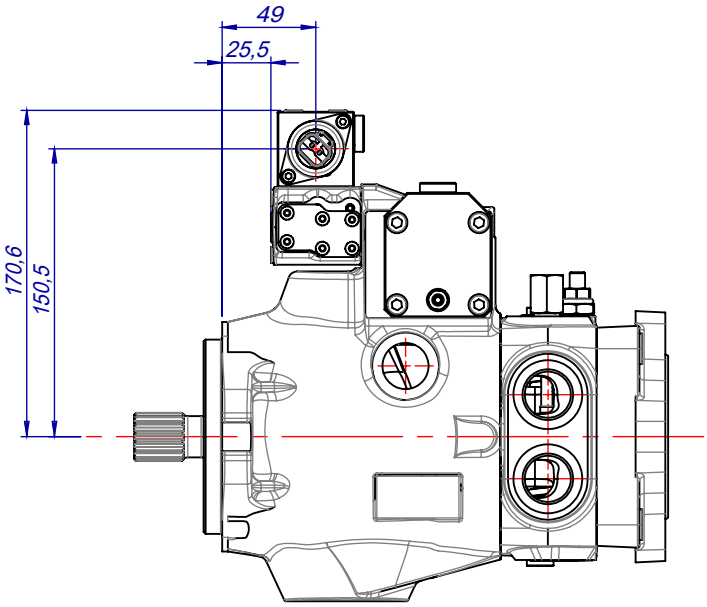

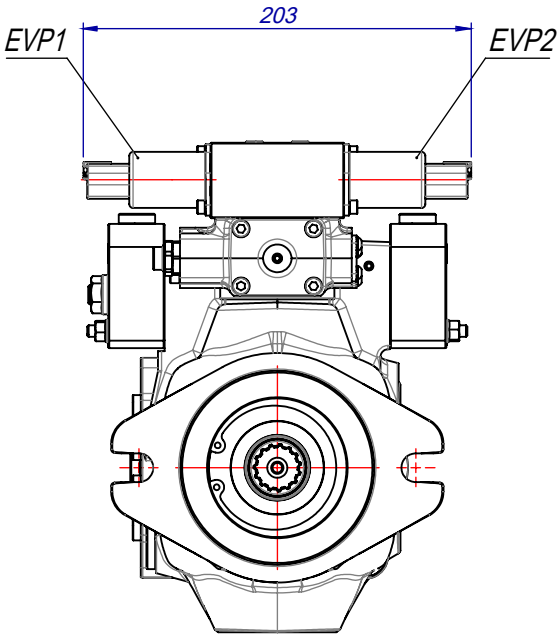

(continued)

SEIX 1.2D (12V DC)
SEIX 2.2D (24V DC)

ELECTRO-PROPORTIONAL SERVO CONTROL WITH FEEDBACK

(Deutsch connector)

HYDRAULIC DIAGRAM

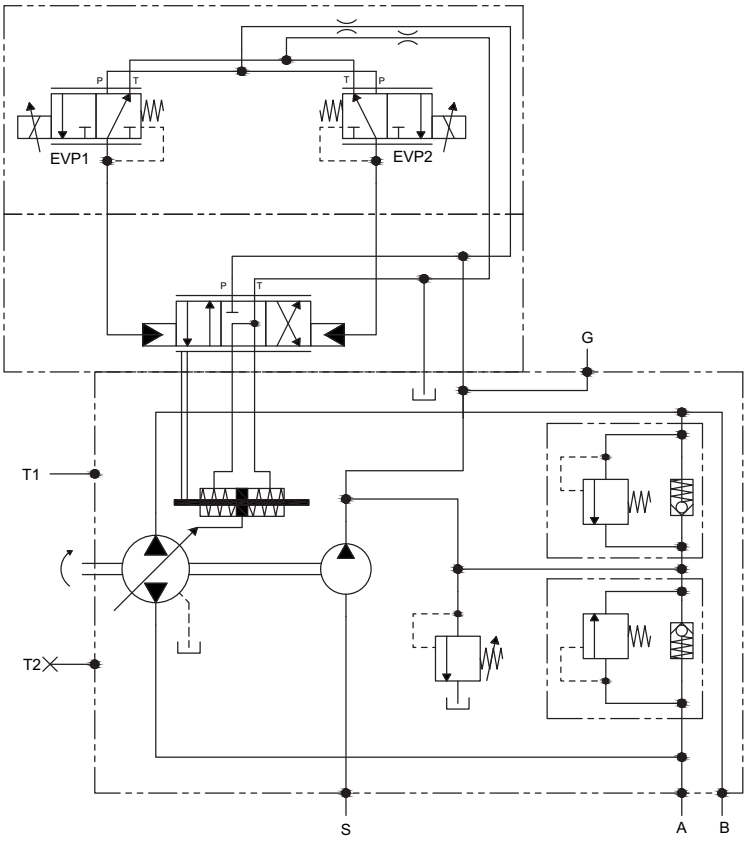

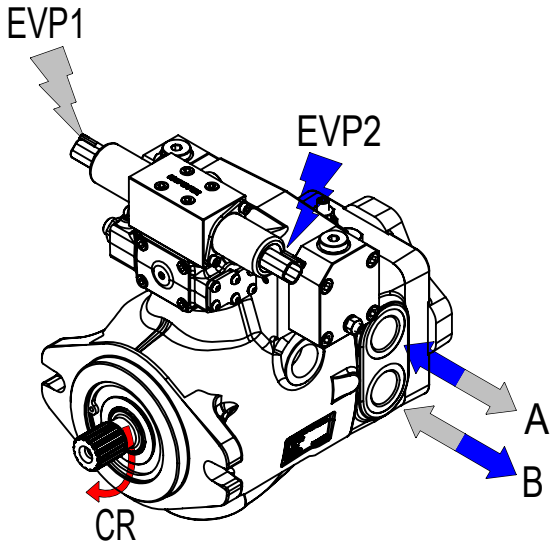

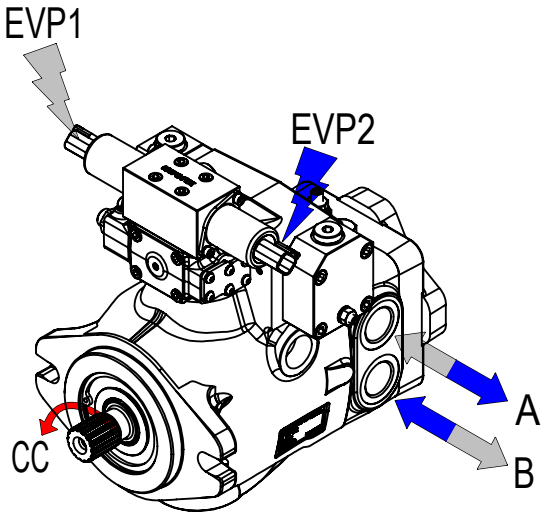

(continued)

SEIX 1.2D (12V DC)
SEIX 2.2D (24V DC)

ELECTRO-PROPORTIONAL SERVOCONTROL WITH FEEDBACK

(Deutsch connector)

CURRENT-DISPLACEMENT GRAPHIC

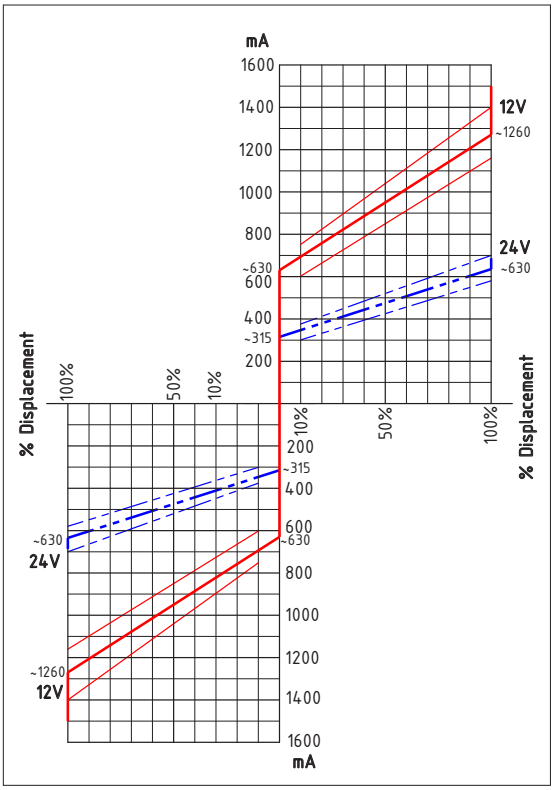

ELECTRICAL FEATURES		
Voltage	12 V DC	24 V DC
Electric current	1500 mA	750 mA
Load resistence	4,72 Ω ± 5%	20,8 Ω ± 5%
Type of control	Current control	
	PWM 100 Hz (suggested)	
Type of connection	AMP Junior Timer	
Protection class	Until IP6K6 / IPX9K	

HYDRAULIC FEATURES	
Max. pressure (P, T)	pP= 5 MPa, pT= 3 MPa
Hysteresis (w/PWM)	<0,07 MPa (pA=2,0)
	<0,1 MPa (pA=2,5)
	<0,15 MPa (pA=3,5)
Filtration ratio	125 µm
Oil contamination level	Min. filtration ratio: 20/18/15
	According ISO 4406
	Hydraulic oil DIN 51524
Min./max. oil temperature	From -20 to +90°C

REAR PUMP MOUNTING FLANGES

SA

SAE-A - 4 HOLES

Max. torque = 120 Nm

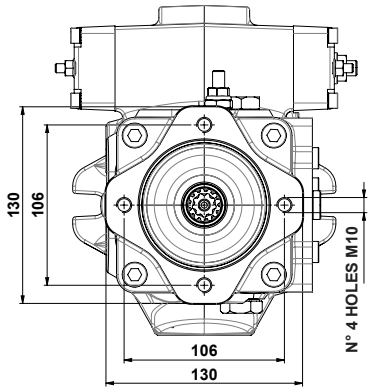

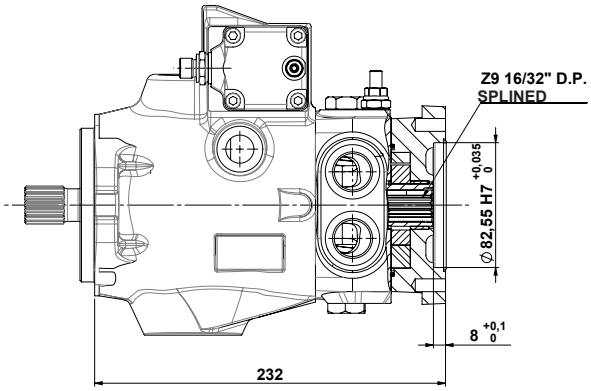

SB

SAE-B - 2 HOLES

Max. torque = 300 Nm

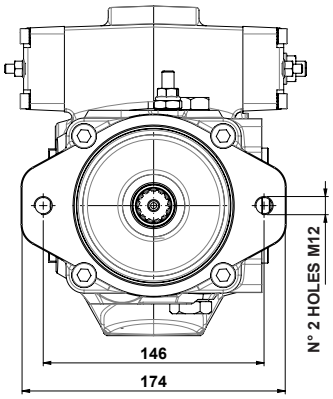

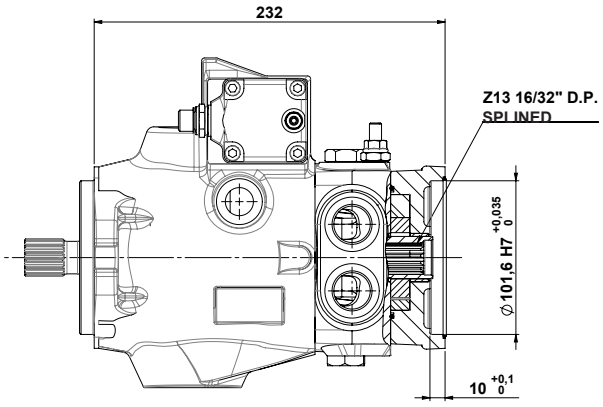

(continued)

REAR PUMP MOUNTING FLANGES

C-SA

CLOSED COVER WITHOUT REAR FITTING

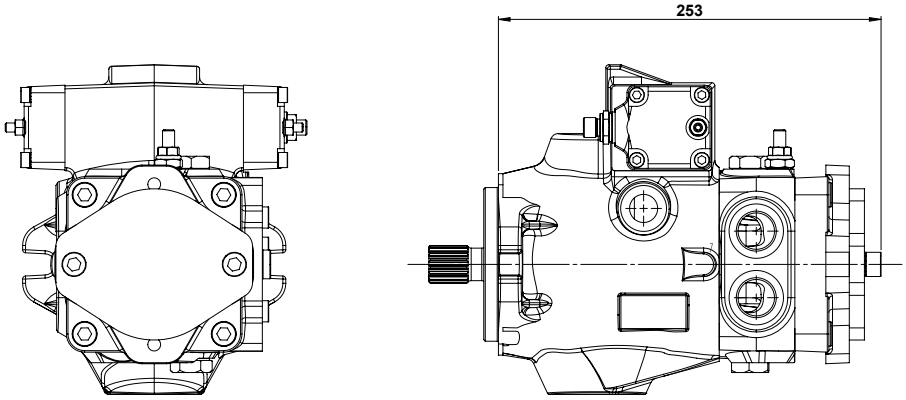

C

CLOSED COVER

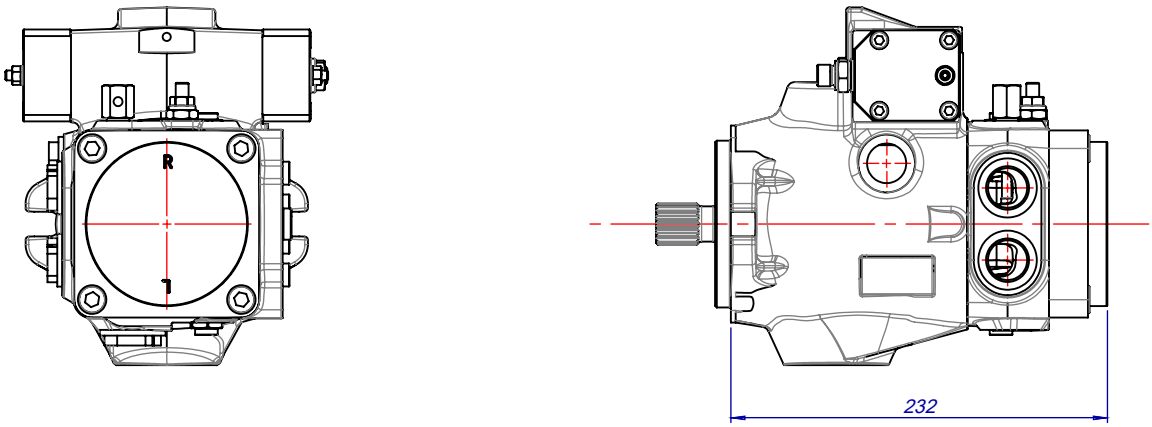

OPTIONAL SB

SCREW BY- PASS

To by pass the oil flow from one direction to the other, with the pump not running or in emergency condition, a by pass screw can be actuated to connect the 2 lines of the hydraulic system. The orifice is completely open after 4 counter-clockwise rotations of the screw.

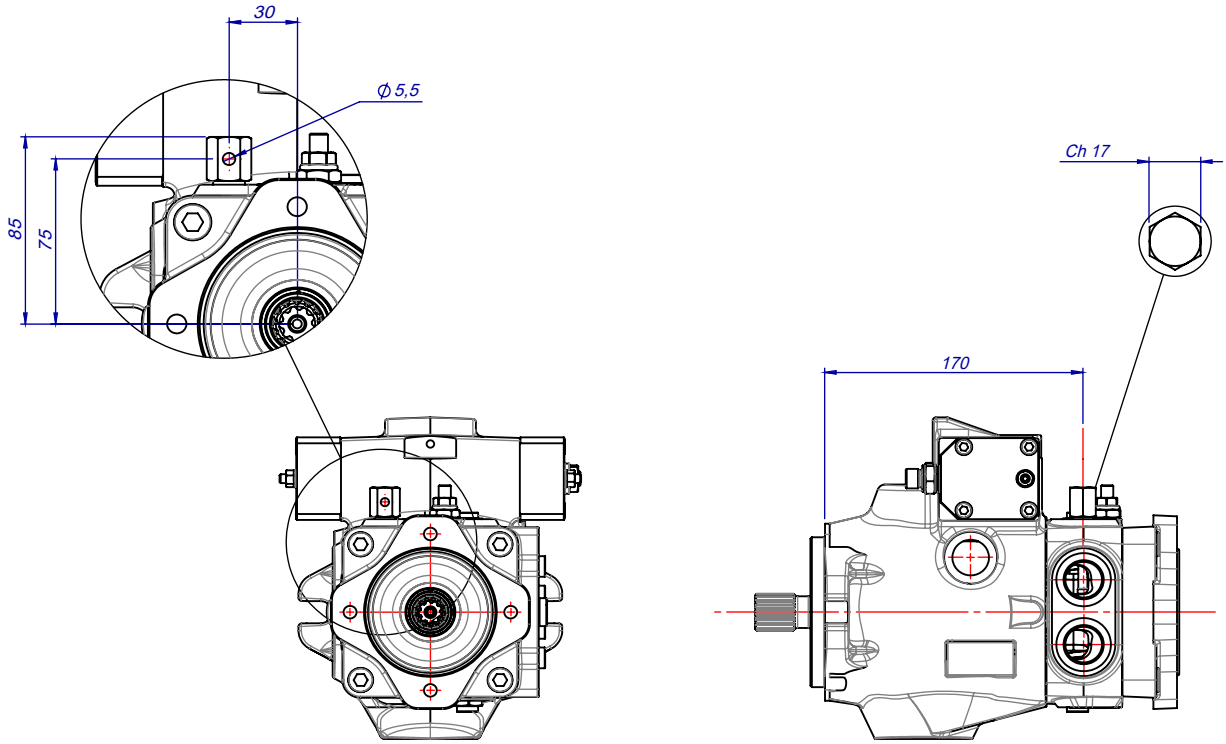

HYDRAULIC DIAGRAM

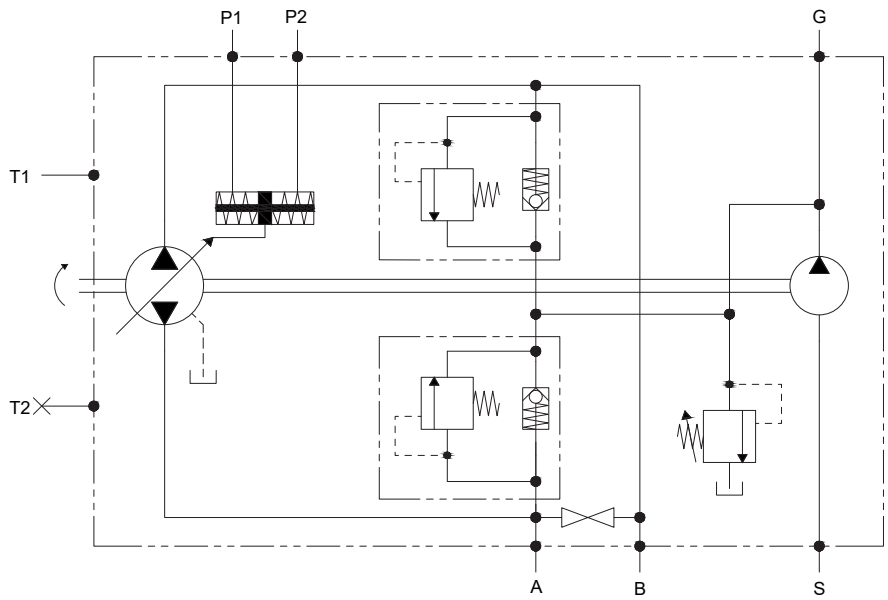

OPTIONAL FR

PRE-ARRANGED FOR CONNECTION WITH EXTERNAL FILTER

The pre-arrangement for the connection with an external filter allows the filtration of the oil of the boost pump under pressure.
The filter is not included and must be with a by-pass, filtration level 10 µm and must be of suitable size for the flow-rate of the boost pump.

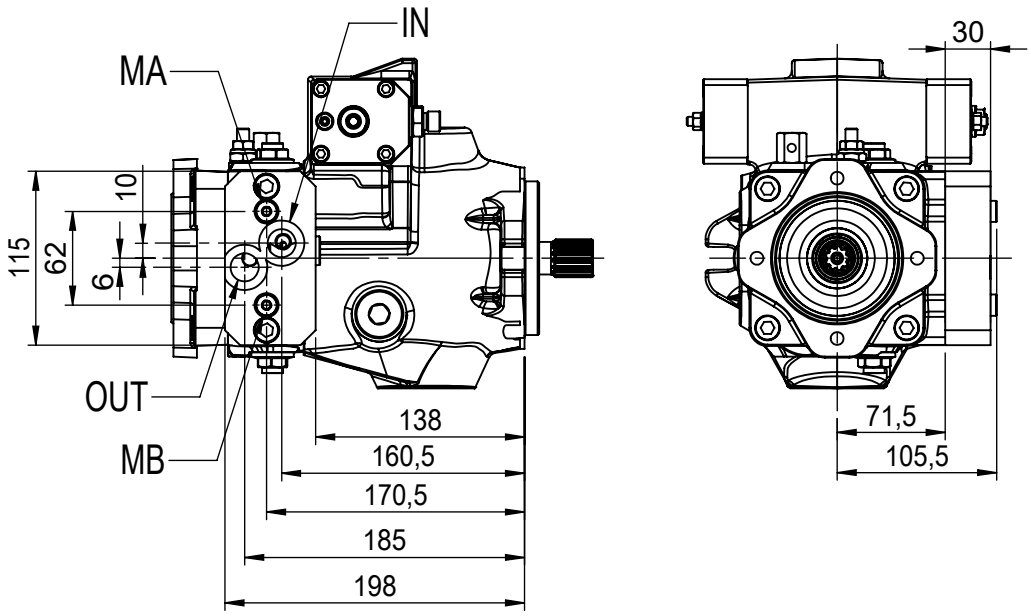

HYDRAULIC DIAGRAM

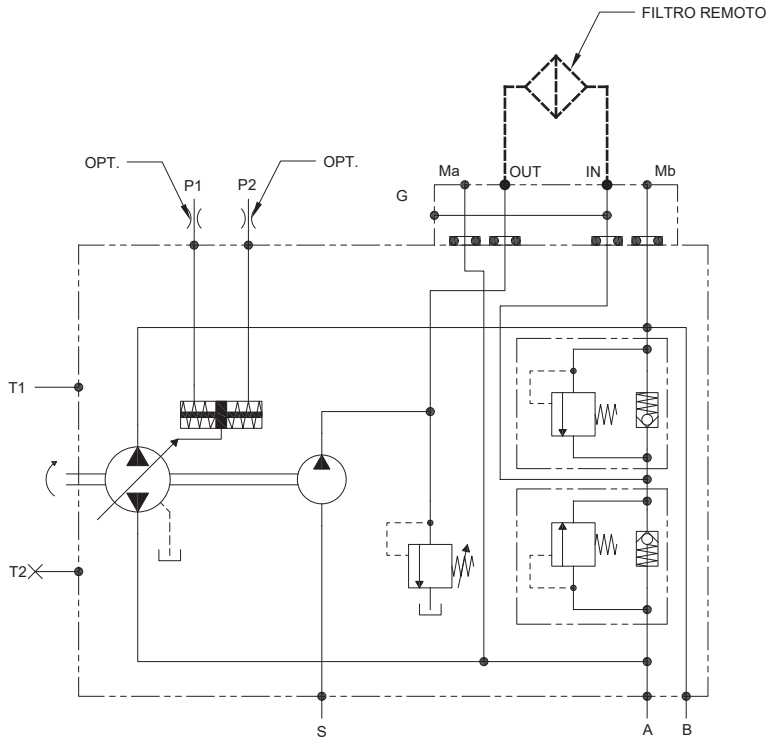

OPTIONAL MOB SHI

MAN ON BOARD

On the pump a normally open electrical operated valve can be fitted. The valve allows the flow delivery only when energized. This function is used to increase the safety of the machine. The solenoid valve is available for 12V or 24V DC voltage.

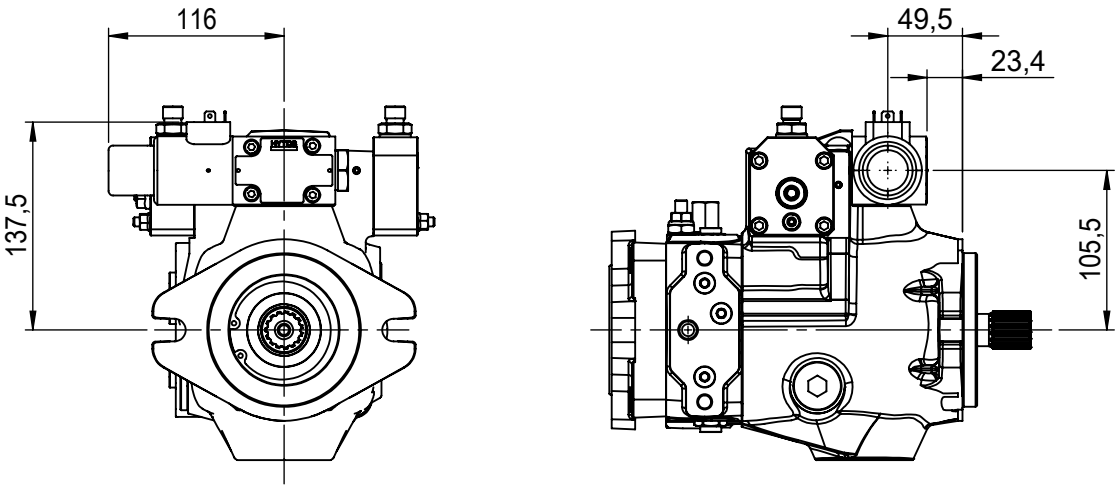

HYDRAULIC DIAGRAM

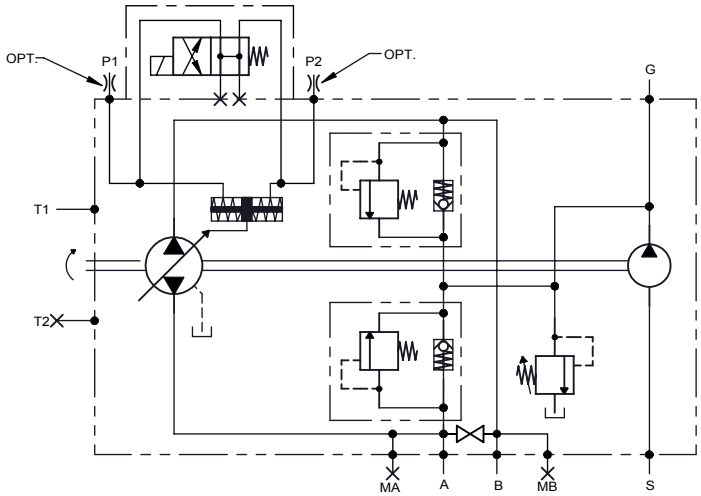

(continued)

OPTIONAL MOB SHI

MAN ON BOARD

TECHNICAL FEATURES

TECHNICAL CHARACTERISTICS	
Maximum pressure	32 MPa
Maximum flow	80 l/min.
Leakage	Max. 5 drops/Min. at 30 MPa
Respone time	32 ms
Temperature	-20°C / +90°C

ELECTRIC CHARACTERISTICS	
Voltage	12V / 24V
Insulation class	IP 67
Frequency	1000 Hz
Tollerance of supply	10 - 30 DC
Ambient temperature	-30°C / +50°C
Connector *	EN 17531-803-A

* Other types of connectors are available.

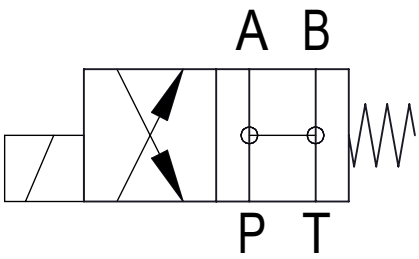

OPTIONAL MOB SEI

MAN ON BOARD

On the pump a normally open electrical operated valve can be fitted. The valve allows the flow delivery only when energized. This function is used to increase the safety of the machine. The solenoid valve is available for 12V or 24V DC voltage.

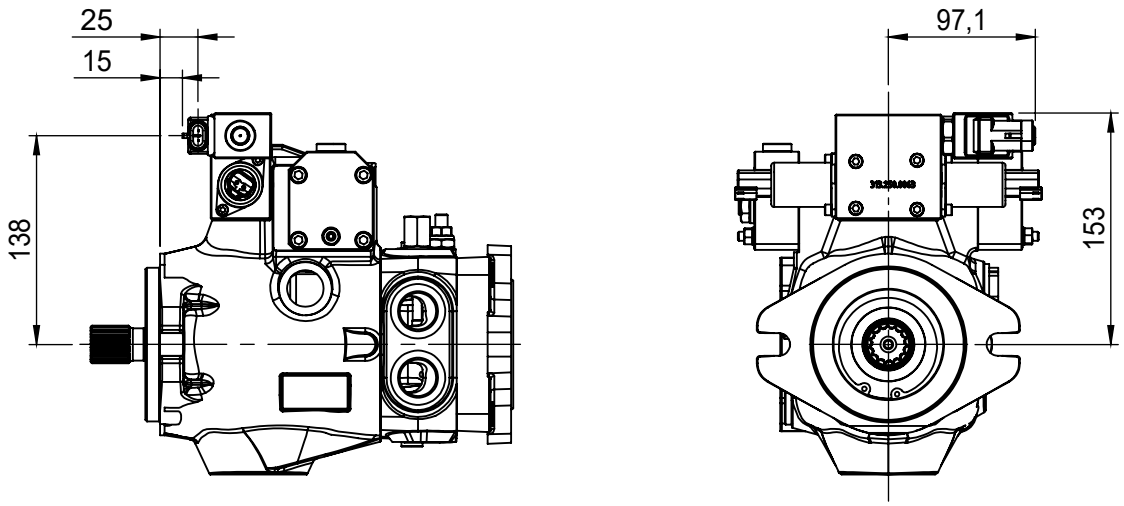

HYDRAULIC DIAGRAM

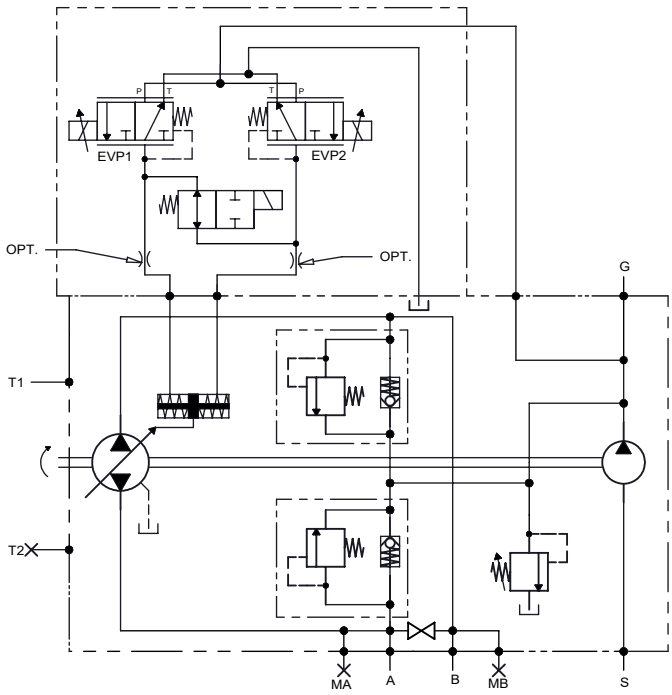

(continued)

OPTIONAL MOB SEI

MAN ON BOARD

TECHNICAL FEATURES

TECHNICAL CHARACTERISTICS	
Maximum pressure	25 MPa
Maximum flow	10 l/min.
Leakage	max. 80 cc/min. at 25 MPa
Respone time	30 ms
Temperature	-30°C / +110°C

ELECTRIC CHARACTERISTICS	
Voltage	12V / 24V
Insulation class	F
Power	18W
Tollerance of supply	+10% / -5% AC
Ambient temperature	-30°C / +60°C
Connector *	DIN 43650 Deutsch (90°)

* Other types of connectors are available.

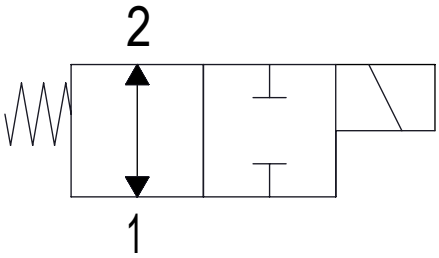

OPTIONAL CO (--)

PRESSURE CUT-OFF VALVE (PRESSURE SETTING)

The CO pressure cut-off valve, when the set pressure is reached, reduces the displacement of the pump in order to maintain a constant working pressure.
The valve operates in place of the pressure relief valves of the pump and increases the energy efficiency of the machine.
The cut-off valve set pressure must be 3 MPa bar lower than the setting of the relief valves.

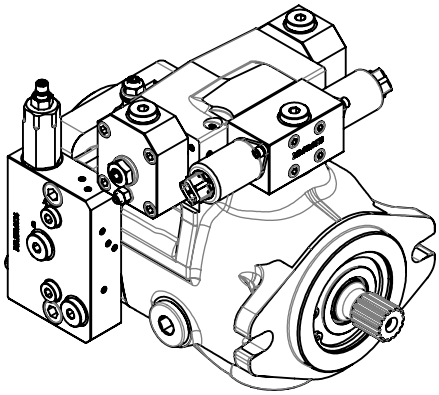

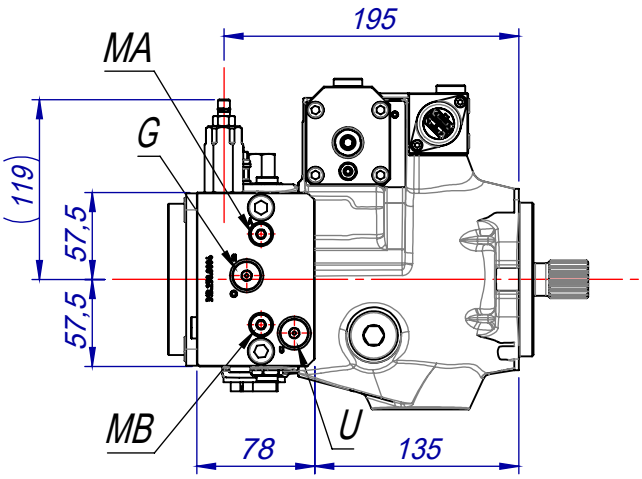

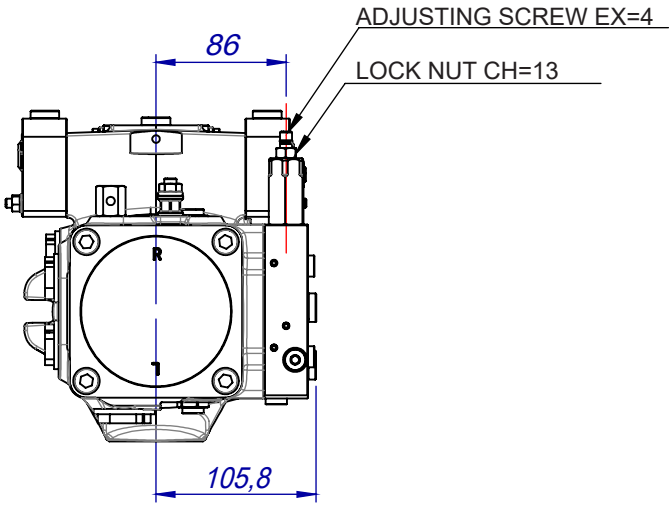

HYDRAULIC DIAGRAM

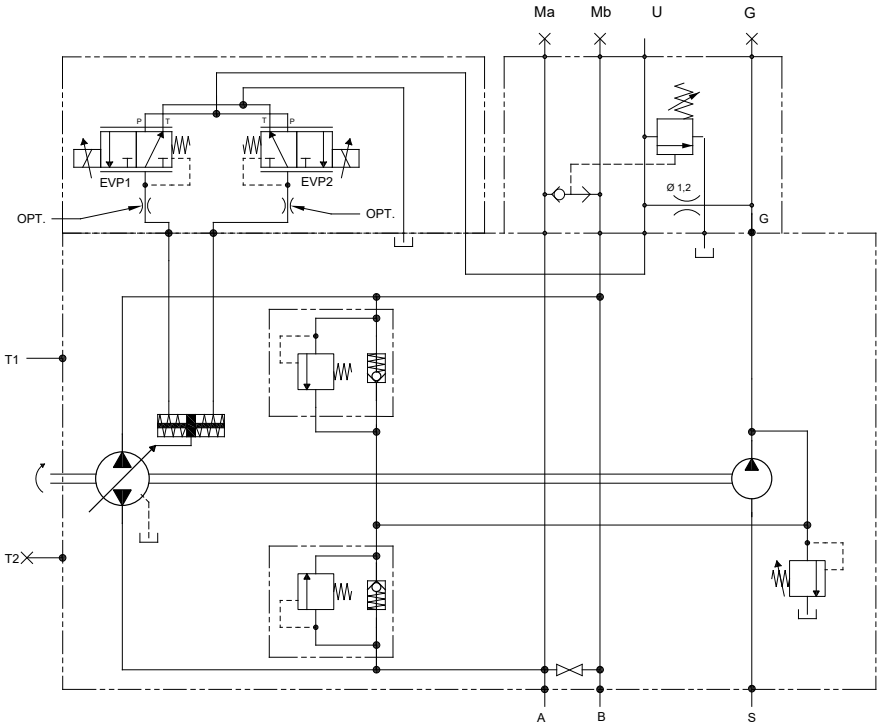

TPVT 4300

VARIABLE DISPLACEMENT AXIAL PISTON TANDEM PUMP

ORDER CODE

4300	TPVT	32	32	CR	SS5	F2.2	SHI	SHI	OA	OA	15	15	14	SA	000	SB
0	1	2	3	4	5	6	7	8	9	10	11	12	13	14	15	16

Pag.

0 - Pump series

4300 = TPV pump 4300

1 - Pump model

TPVT = Closed loop circuit tandem pump

2 - Pump displacement primary pump

32 = 32 cm³/n **38** = 38 cm³/n **45** = 45 cm³/n **50** = 50 cm³/n

3 - Pump displacement secondary pump

32 = 32 cm³/n **38** = 38 cm³/n **45** = 45 cm³/n **50** = 50 cm³/n

4 - Pump rotation

CR = Clockwise Rotation (right)
CC = Counter-clockwise rotation (left)

5 - Shaft (mounting side)

SS3	= Splined shaft Z13 - 16/32 D.P	**17**
SS5	= Splined shaft Z15 - 16/32 D.P	**17**

6 - Mounting side flange

F2.2	= SAE-B 2 holes - pilot diam. 101,6 mm.	**17**

7 - Control devices position of primary pump

SHI	= Hydraulic servo control	**52**
SEI1.4	= Electro-proportional servo control 12V DC (AMP junior timer connector)	**54**
SEI2.4	= Electro-proportional servo control 24V DC (AMP junior timer connector)	**54**
SEI1.4D	= Electro-proportional servo control 12V DC (Deutsch connector)	**57**
SEI2.4D	= Electro-proportional servo control 24V DC (Deutsch connector)	**57**
SE-CA1	= Open center on-off electric servo control 12 V DC (AMP Junior Timer connector)	**60**
SE-CC1	= Closed center on-off electric servo control 12 V DC (AMP Junior Timer connector)	**61**
SE-CA1D	= Open center on-off electric servo control 12 V DC (Deutsch connector)	
SE-CC1D	= Closed center on-off electric servo control 12 V DC (Deutsch connector)	
SE-CA2	= Open center on-off electric servo control 24 V DC (AMP Junior Timer connector)	
SE-CC2	= Closed center on-off electric servo control 24 V DC (AMP Junior Timer connector)	
SE-CA2	= Open center on-off electric servo control 24 V DC (Deutsch connector)	
SE-CC2	= Closed center on-off electric servo control 24 V DC (Deutsch connector)	
SHIX	= Hydraulic servo control with feed back	**62**
SMIX	= Mechcanical lever servo control with feed back	**64**
SEIX1.2	= Electro-proportional servo control with feed back 12V DC (AMP junior timer connector)	**66**
SEIX2.2	= Electro-proportional servo control with feed back 24V DC (AMP junior timer connector)	**66**
SEIX1.2D	= Electro-proportional servo control with feed back 12V DC (Deutsch connector)	**69**
SEIX2.2D	= Electro-proportional servo control with feed back 24V DC (Deutsch connector)	**69**

8 - Control devices position of secondary pump

SHI	= Hydraulic servo control	**52**
SEI1.4	= Electro-proportional servo control 12V DC (AMP junior timer connector)	**54**
SEI2.4	= Electro-proportional servo control 24V DC (AMP junior timer connector)	**54**
SEI1.4D	= Electro-proportional servo control 12V DC (Deutsch connector)	**57**
SEI2.4D	= Electro-proportional servo control 24V DC (Deutsch connector)	**57**

(continued)

ORDER CODE

		Pag.
SE-CA1	= Open center on-off electric servo control 12 V DC (AMP Junior Timer connector)	**60**
SE-CC1	= Closed center on-off electric servo control 12 V DC (AMP Junior Timer connector)	**61**
SE-CA1D	= Open center on-off electric servo control 12 V DC (Deutsch connector)	
SE-CC1D	= Closed center on-off electric servo control 12 V DC (Deutsch connector)	
SE-CA2	= Open center on-off electric servo control 24 V DC (AMP Junior Timer connector)	
SE-CC2	= Closed center on-off electric servo control 24 V DC (AMP Junior Timer connector)	
SE-CA2	= Open center on-off electric servo control 24 V DC (Deutsch connector)	
SE-CC2	= Closed center on-off electric servo control 24 V DC (Deutsch connector)	
SHIX	= Hydraulic servo control with feed back	**62**
SMIX	= Mechcanical lever servo control with feed back	**64**
SEIX1.2	= Electro-proportional servo control with feed back 12V DC (AMP junior timer connector)	**66**
SEIX2.2	= Electro-proportional servo control with feed back 24V DC (AMP junior timer connector)	**66**
SEIX1.2D	= Electro-proportional servo control with feed back 12V DC (Deutsch connector)	**69**
SEIX2.2D	= Electro-proportional servo control with feed back 24V DC (Deutsch connector)	**69**

9 - Control devices position of primary pump

OA = Position A

10 - Control devices position of secondary pump

OA = Position A

11 - Primary pump relief valve settings

15 = 15 MPa	**18** = 18 MPa	**20** = 20 MPa
25 = 25 MPa	**30** = 30 MPa	**35** = 35 MPa

12 - Secondary pump relief valve settings

15 = 15 MPa	**18** = 18 MPa	**20** = 20 MPa
25 = 25 MPa	**30** = 30 MPa	**35** = 35 MPa

13 - Boost pump

00 = Without boost pump *

14 = Standard boost pump 14 cm^3/n - pressure 2 MPa (1000 n/min) for tandem pump

14XX = Boost pump 14 cm^3/n - pressure 2 ÷ 3 MPa (1000 n/min) available on request, please contact our technical departement for details.

* Upon order, please provide information on maximum external charge flow.

14 - Rear pump connection options

SA	= SAE-A 4 holes mounting flange (female shaft)	**72**
SB	= SAE-B 2 holes mounting flange (female shaft)	**72**
C-SA	= Closed (without rear fitting)	**73**

15 - Auxiliary gear pump displacements

000 = Without pump

Group 2 SAE-A

204 = 4,2 cm^3/n	**206** = 6,0 cm^3/n	**209** = 8,4 cm^3/n	**211** = 10,8 cm^3/n
214 = 14,4 cm^3/n	**217** =16,8 cm^3/n	**219** =19,2 cm^3/n	**222** = 22,8 cm^3/n
226 = 26,2 cm^3/n	**230** = 30,0 cm^3/n	**240** = 40,0 cm^3/n	

Group 3 SAE-B

315 = 15,0 cm^3/n	**318** = 18,0 cm^3/n	**321** = 21 cm^3/n	**327** = 27,0 cm^3/n
332 = 32,0 cm^3/n	**338** = 38,0 cm^3/n	**343** = 43,0 cm^3/n	**347** = 47,0 cm^3/n
351 = 51,0 cm^3/n	**354** = 54,0 cm^3/n	**361** = 61,0 cm^3/n	**364** = 64,0 cm^3/n
370 = 70,0 cm^3/n	**374** = 74,0 cm^3/n	**390** = 90,0 cm^3/n	

(continued)

ORDER CODE

16 - Optional

00	= Without optional	
SB	= Screw by-pass (Standard)	**74**
FR	= Pre-arranged for connection with external filter	**75**
MOB (SHI)	= Man on board with SHI Hydraulic servo control	**76**
MOB (SEI)	= Man on board with SEI Electro-proportional servo control	**78**
G/J/M/-	= Port threads and restrictor diameter	

	Servo control type	Port threads	Symbol
STANDARD	SEI	Plugged	-
	SHI	1/4” BSPP	G
ON REQUEST	SHI	JIC (7/16” - 20)	J
	SHI	METRIC (M12x1,5)	M

Example G/08 = 1/4" BSPP port threads and Ø 0,8 mm restrictor (SHI)
Example -/08 = Ø 0,8 mm restrictor (SEI)

Restrictor diameter (SHI/SEI)	
-	Without restrictor
06	Restrictor orifice ø 0,6 mm
08	Restrictor orifice ø 0,8 mm
10	Restrictor orifice ø 1,0 mm
12	Restrictor orifice ø 1,2 mm
16	Restrictor orifice ø 1,6 mm
20	Restrictor orifice ø 2,0 mm

GENERAL DIMENSIONS/TANDEM PUMP PORTS

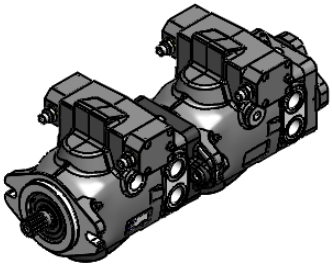

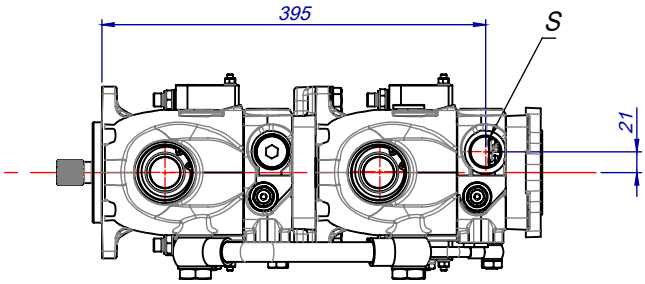

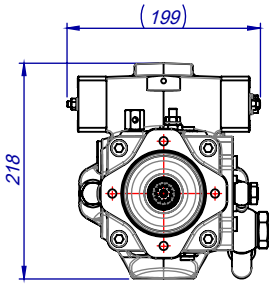

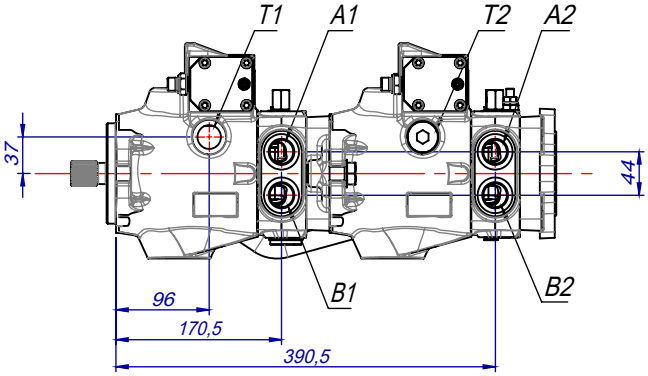

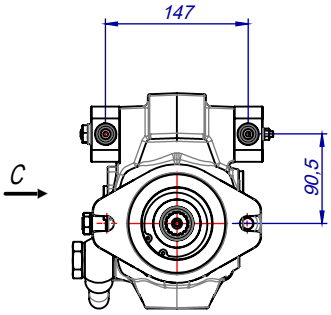

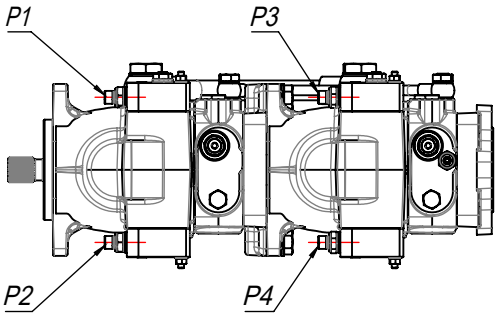

VIEW FROM C

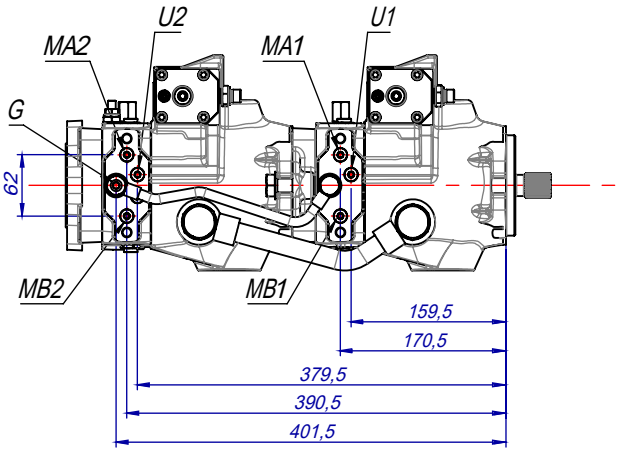

PORTS		
A1 - B1	Main pressure ports 1	3/4" BSPP
A2 - B2	Main pressure ports 2	3/4" BSPP
T1 - T2	Drain	3/4" BSPP
S	Suction	1" BSPP
G1 - G2	Boost pumps pressure gauge ports	1/8" BSPP
MA1 - MB1 MA2 - MB2	Pressure gauge ports	1/8" BSPP
P1 - P2 P3 - P4	Pilot pressure	1/4" BSPP

SHI

HYDRAULIC SERVO CONTROL

The pump displacement variation is obtained by adjusting the pressure on P1, P2, P3 and P4 servo control ports by means of a hydraulic proportional joystick (with integrated pressure reducing valves).
The servo control oil supply can be obtained by taking pressure from the boost pump (G1 - G2 ports), see pag. 49.
The servo control return time can be adjusted by inserting a restrictor on the joystick supply line (0,5 ÷ 1,2 mm).
The servo control operation curve, in both directions, goes from 0,4 to 1,8 MPa (tolerance (± 5 %).
The adjusting curve of the hydraulic joystick has to be a little wider (0,3 ÷ 1,9 MPa).
Suggested curves for HPV series Joysticks: CR062 (see HT 73/B/105/0417/E catalogue).

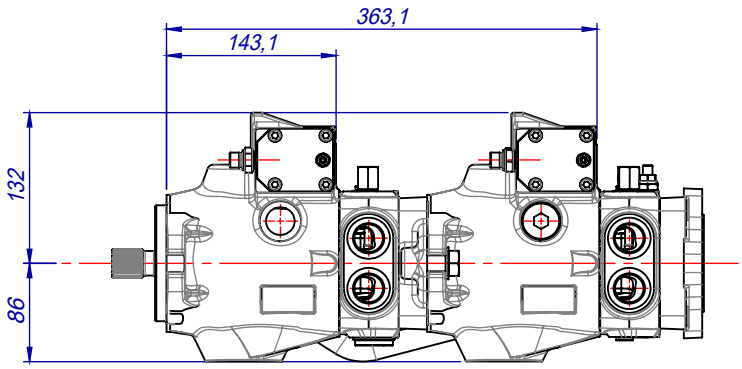

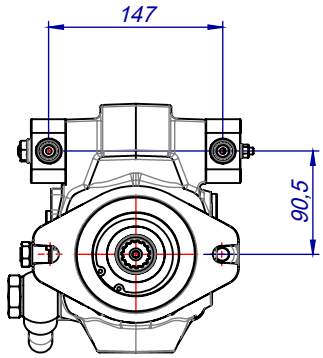

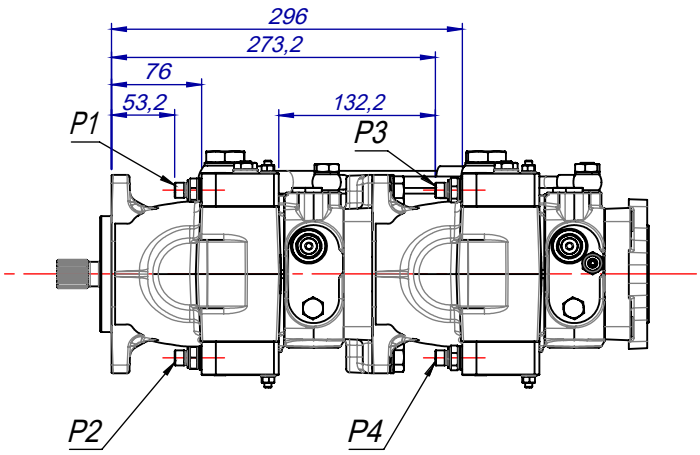

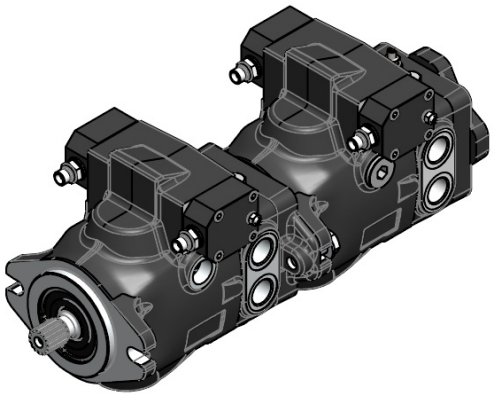

(continued)

SHI

HYDRAULIC SERVO CONTROL

HYDRAULIC DIAGRAM

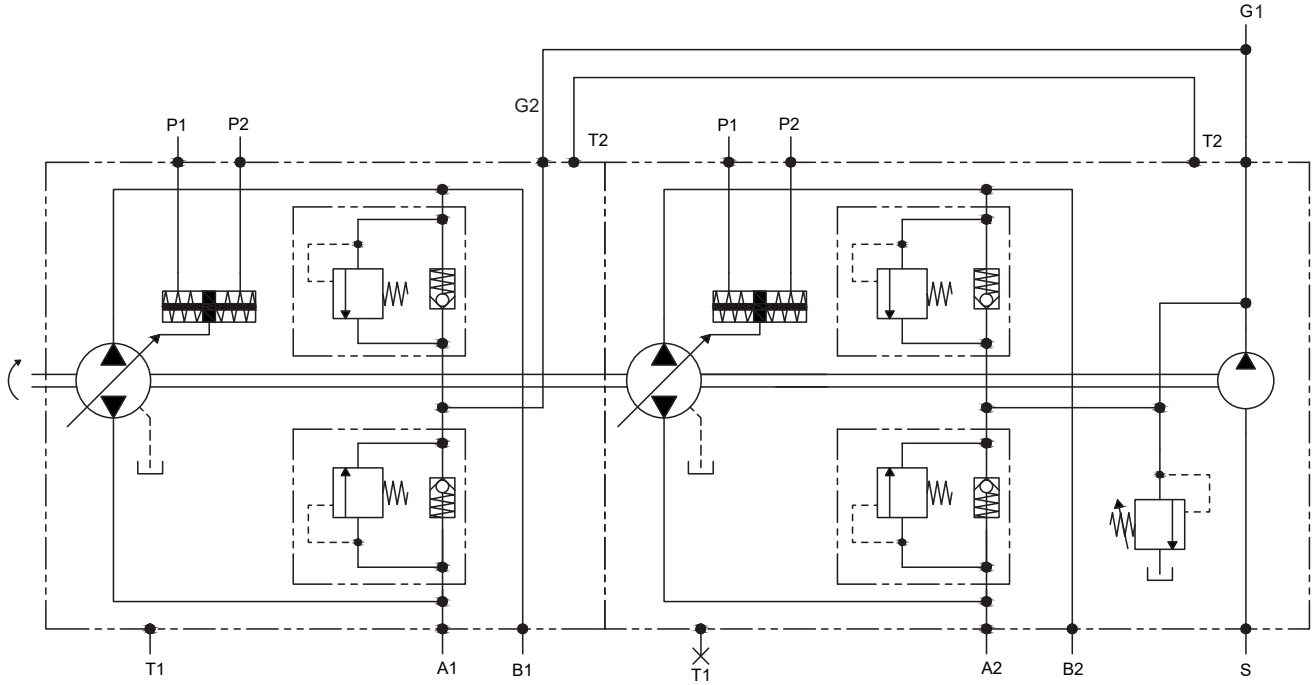

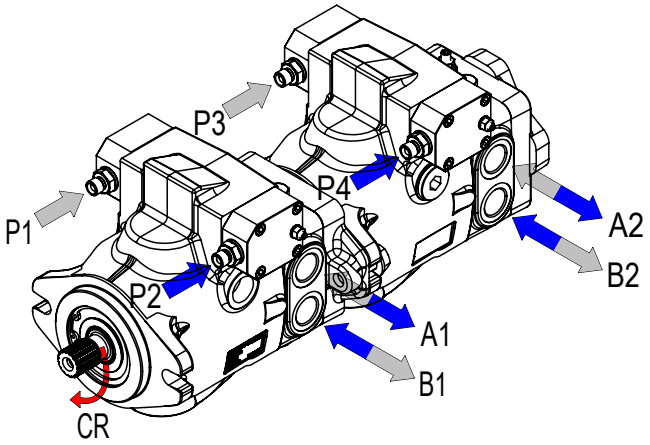

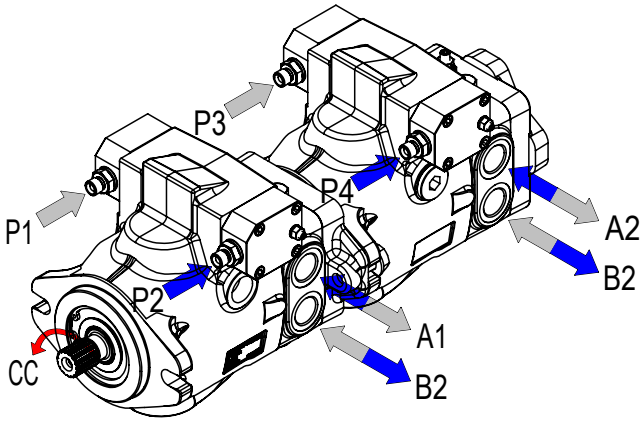

SEI 1.4 (12V DC)
SEI 2.4 (24V DC)

ELECTRO-PROPORTIONAL SERVO CONTROL

(AMP junior timer connector)

The pump displacement variation is obtained by an electric signal, which varies approx.:

- from 315 to 630 mA (24V DC voltage)
- from 630 to 1260 mA (12V DC voltage)

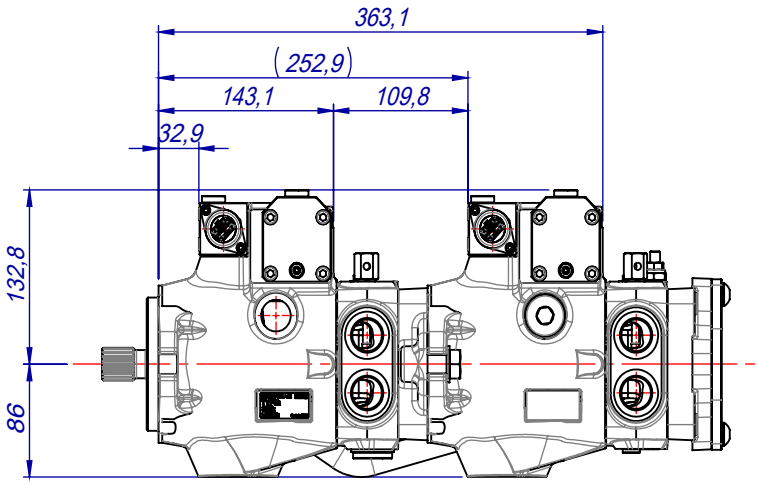

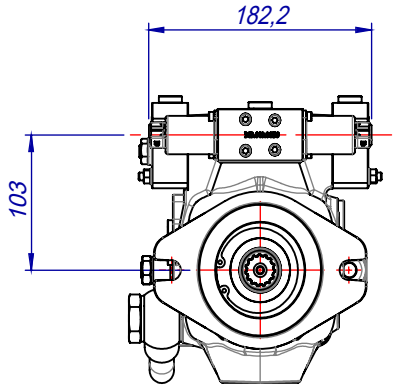

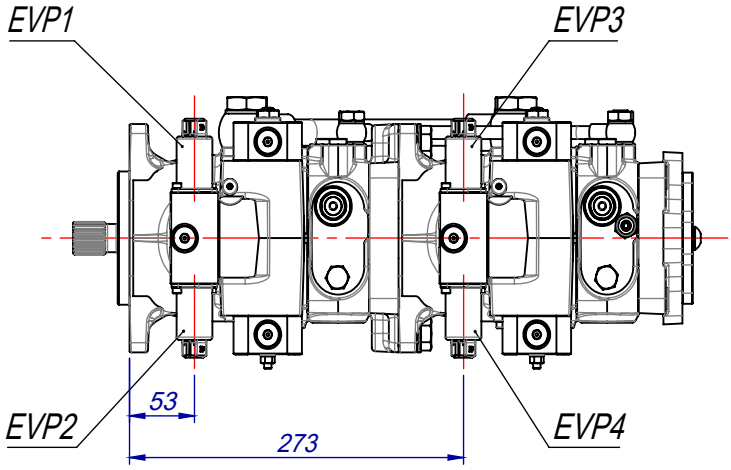

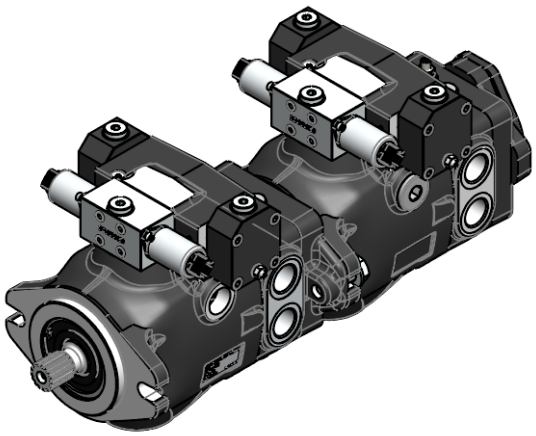

(continued)

SEI 1.4 (12V DC)
SEI 2.4 (24V DC)

ELECTRO-PROPORTIONAL SERVO CONTROL

(AMP junior timer connector)

HYDRAULIC DIAGRAM

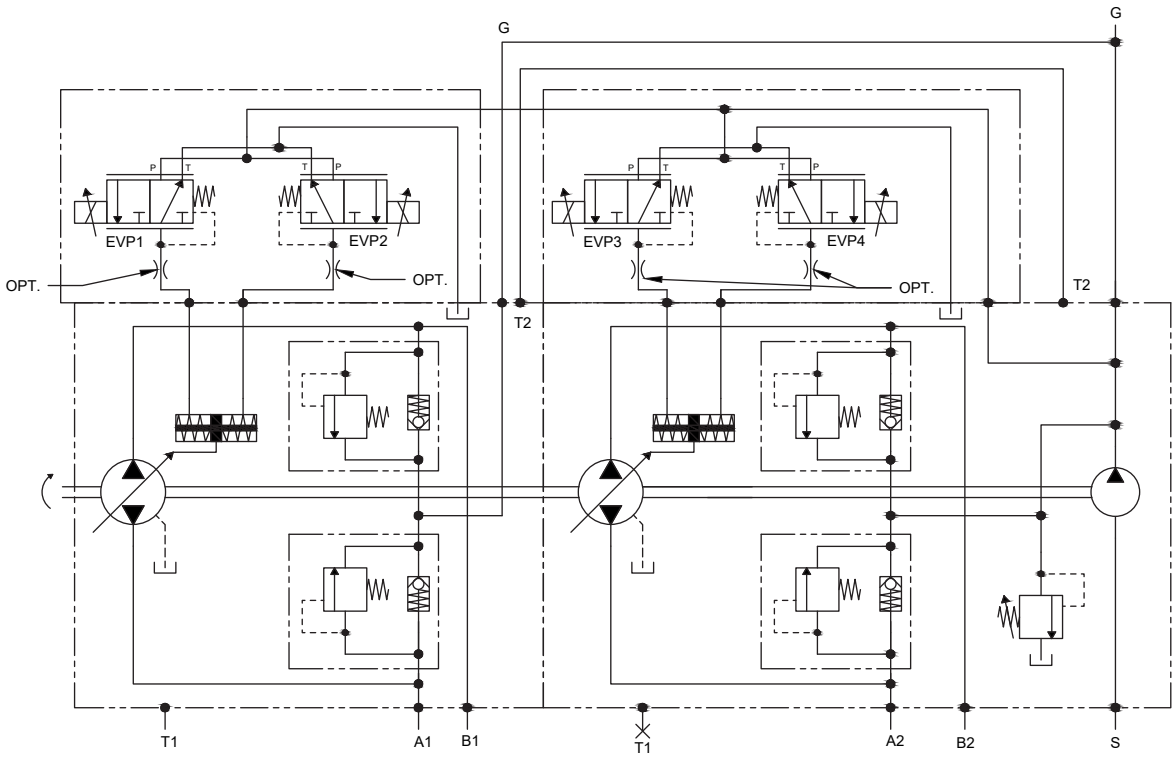

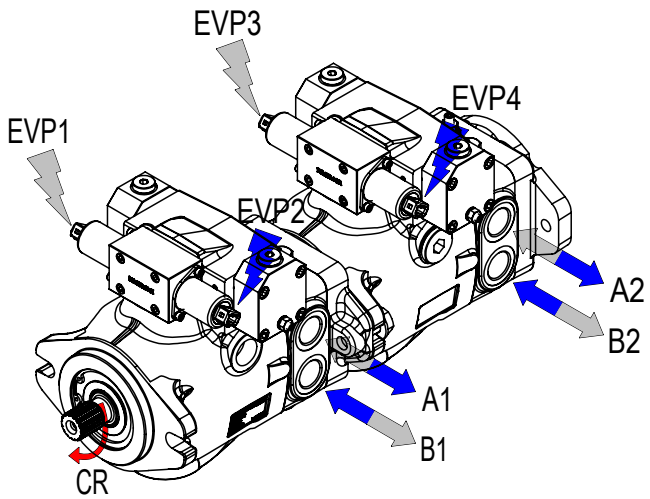

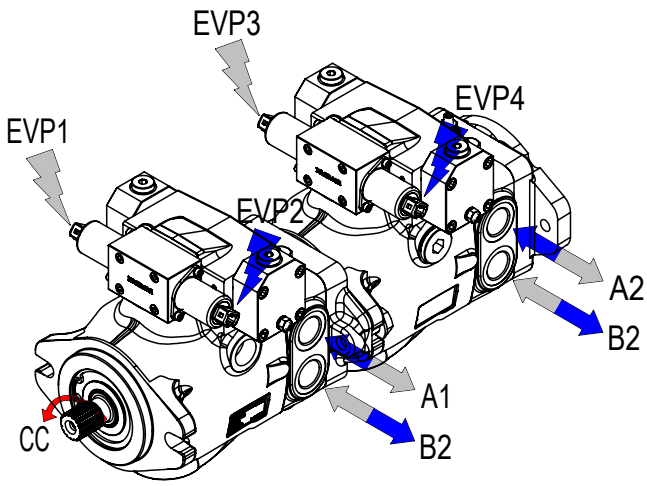

(continued)

SEI 1.4 (12V DC)
SEI 2.4 (24V DC)

ELECTRO-PROPORTIONAL SERVO CONTROL

(AMP junior timer connector)

CURRENT-DISPLACEMENT GRAPHIC

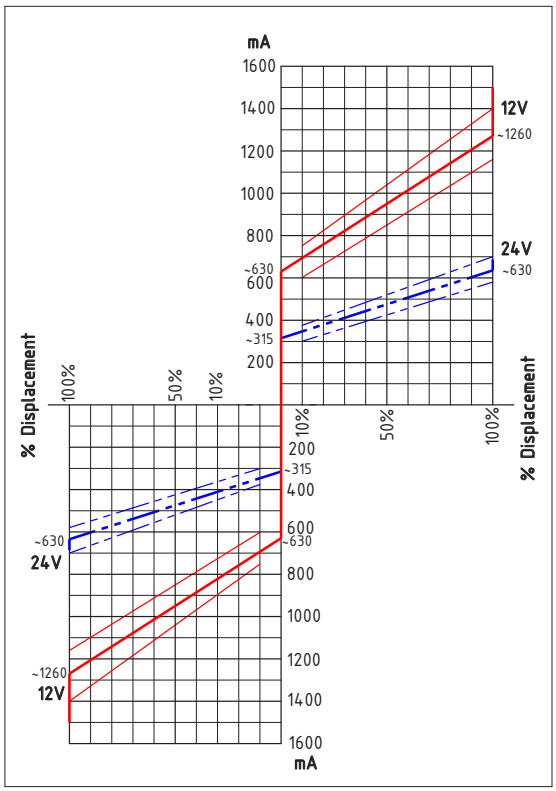

SOLENOID VALVE ELECTRICAL FEATURES		
Voltage	12 V DC	24 V DC
Electric current	1500 mA	750 mA
Load resistence	4,72 Ω ± 5%	20,8 Ω ± 5%
Type of control	Current control	
	PWM 100 Hz (suggested)	
Type of connection	AMP Junior Timer	
Protection class	Until IP6K6 / IPX9K	

SOLENOID VALVE HYDRAULIC FEATURES	
Max. pressure (P, T)	pP= 5 MPa, pT= 3 MPa
Hysteresis (w/PWM)	<0,07 MPa (pA=2,0)
	<0,1 MPa (pA=2,5)
	<0,15 MPa (pA=3,5)
Filtration ratio	125 µm
Oil contamination level	Min. filtration ratio: 20/18/15
	According ISO 4406
	Hydraulic oil DIN 51524
Min./max. oil temperature	From -20 to +90°C

SEI 1.4D (12V DC)
SEI 2.4D (24V DC)

ELECTRO-PROPORTIONAL SERVO CONTROL

(Deutsch connector)

The pump displacement variation is obtained by an electric signal, which varies approx.:

- from 315 to 630 mA (24V DC voltage)
- from 630 to 1260 mA (12V DC voltage)

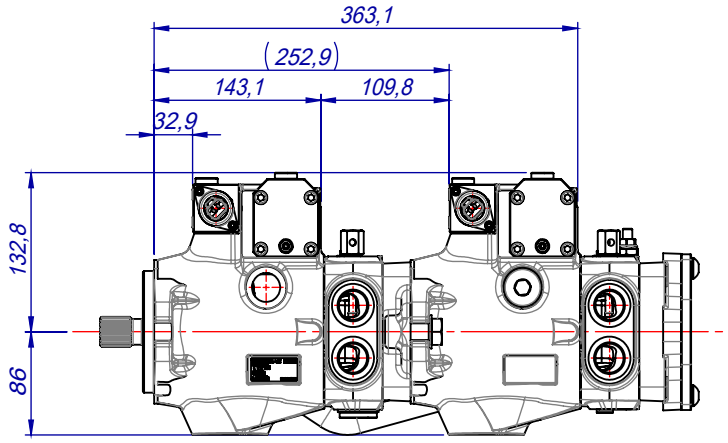

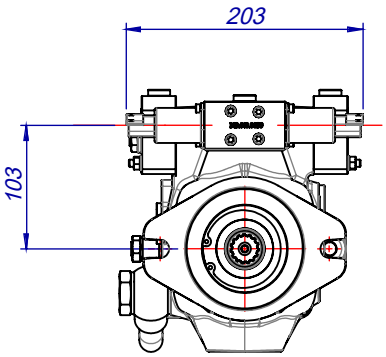

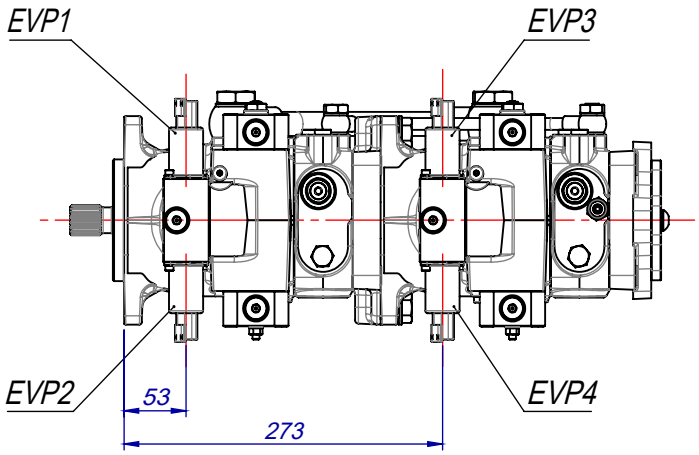

(continued)

SEI 1.4D (12V DC)
SEI 2.4D (24V DC)

ELECTRO-PROPORTIONAL SERVO CONTROL

(Deutsch connector)

HYDRAULIC DIAGRAM

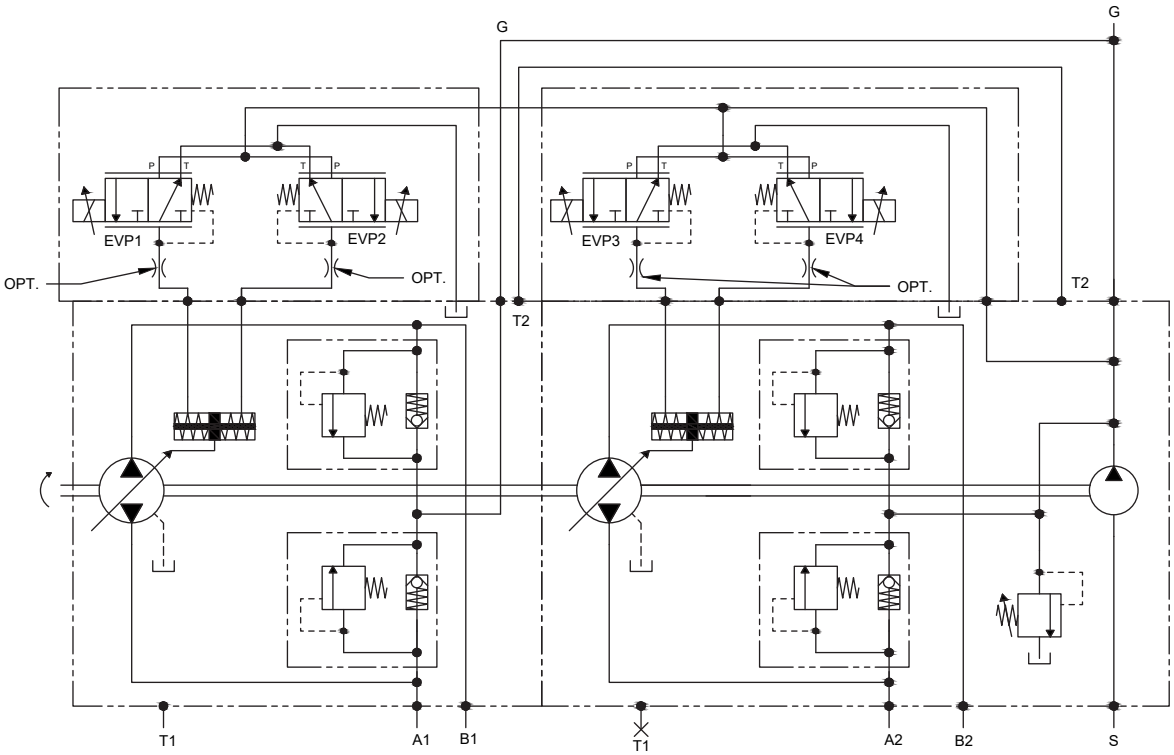

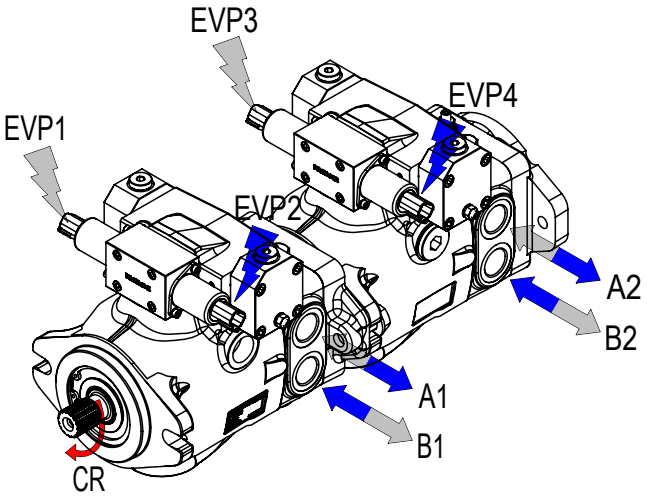

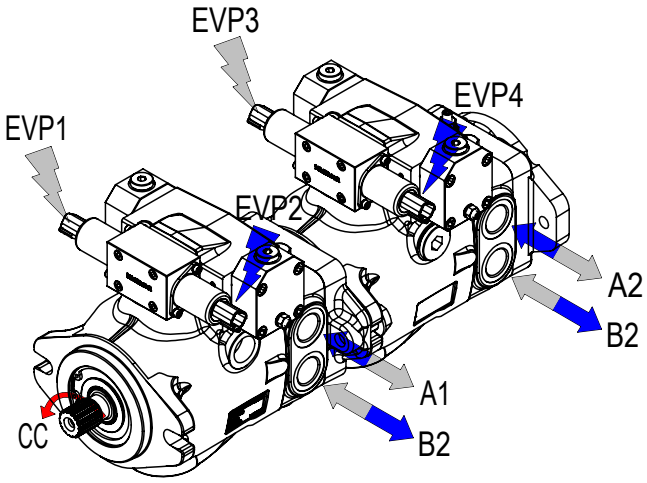

(continued)

SEI 1.4D (12V DC)
SEI 2.4D (24V DC)

ELECTRO-PROPORTIONAL SERVO CONTROL

(Deutsch connector)

CURRENT-DISPLACEMENT GRAPHIC

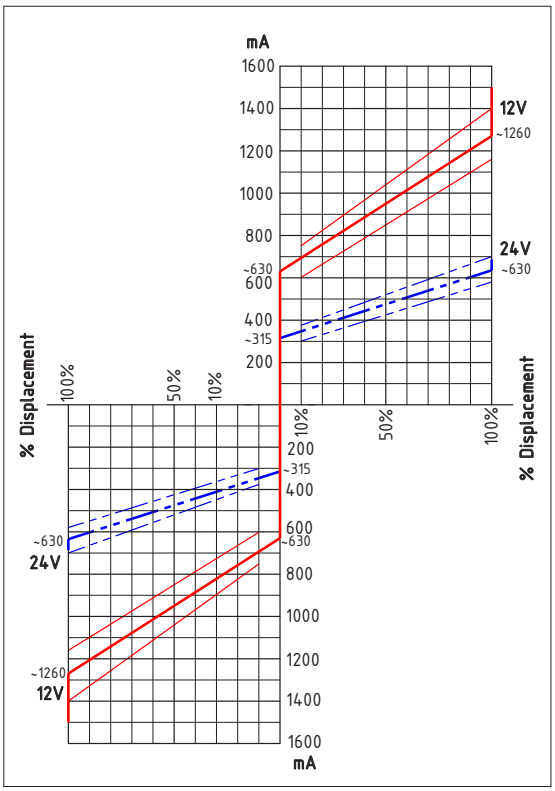

SOLENOID VALVE ELECTRICAL FEATURES		
Voltage	12 V DC	24 V DC
Electric current	1500 mA	750 mA
Load resistence	4,72 Ω ± 5%	20,8 Ω ± 5%
Type of control	Current control	
	PWM 100 Hz (suggested)	
Type of connection	DEUTSCH DT 04-2P	
Protection class	Until IP6K6 / IPX9K	

SOLENOID VALVE HYDRAULIC FEATURES	
Max. pressure (P, T)	pP= 5 MPa, pT= 3 MPa
Hysteresis (w/PWM)	<0,07 MPa (pA=2,0)
	<0,1 MPa (pA=2,5)
	<0,15 MPa (pA=3,5)
Filtration ratio	125 µm
Oil contamination level	Min. filtration ratio: 20/18/15
	According ISO 4406
	Hydraulic oil DIN 51524
Min./max. oil temperature	From -20 to +90°C

SE-CA (12V DC / 24V DC)

OPEN CENTER ON-OFF ELECTRIC SERVO CONTROL

ORDER ODE	TYPE	VOLTAGE (V.)	CONNECTION
SE-CA1	Open Center	12	EN 1745301-803A
SE-CC1	Closed Center	12	EN 1745301-803A
SE-CA1D	Open Center	12	DEUTSCH DT04-2P
SE-CC1D	Closed Center	12	DEUTSCH DT04-2P
SE-CA2	Open Center	24	EN 1745301-803A
SE-CC2	Closed Center	24	EN 1745301-803A
SE-CA2D	Open Center	24	DEUTSCH DT04-2P
SE-CC2D	Closed Center	24	DEUTSCH DT04-2P

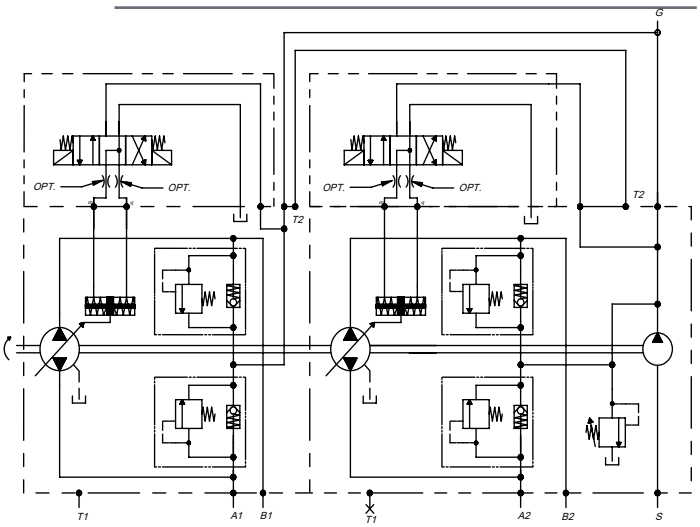

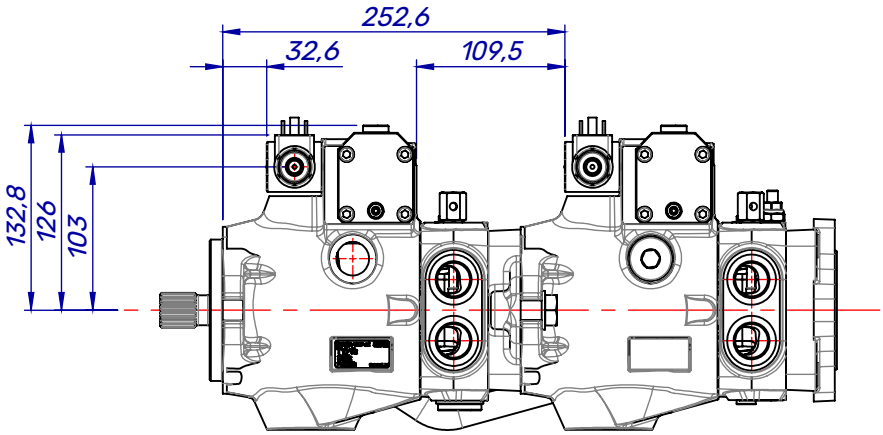

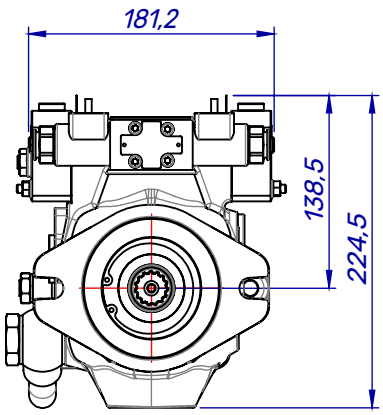

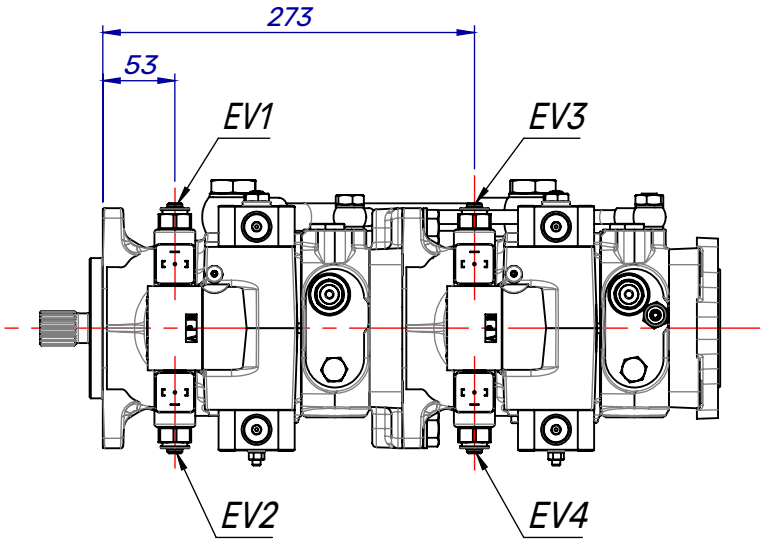

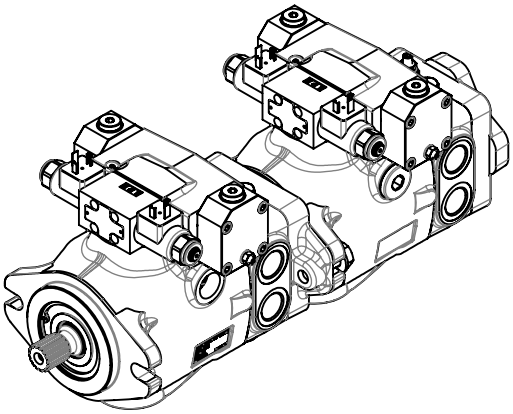

SE-CC (12V DC / 24V DC)

CLOSED CENTER ON-OFF ELECTRIC SERVO CONTROL

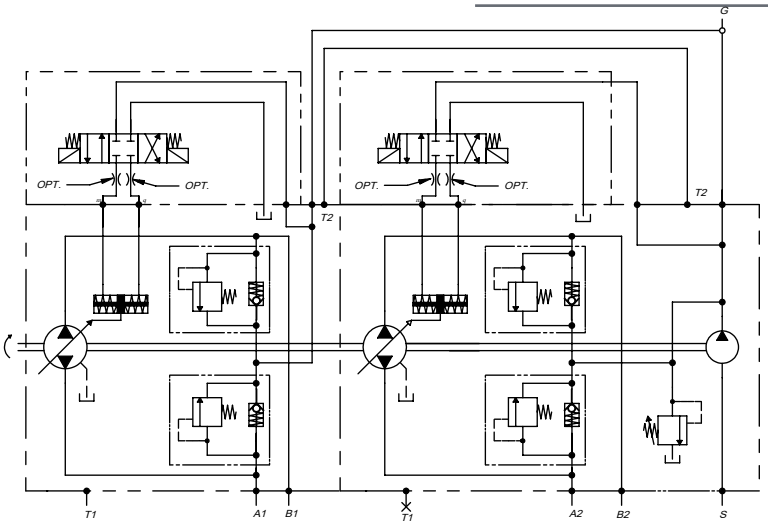

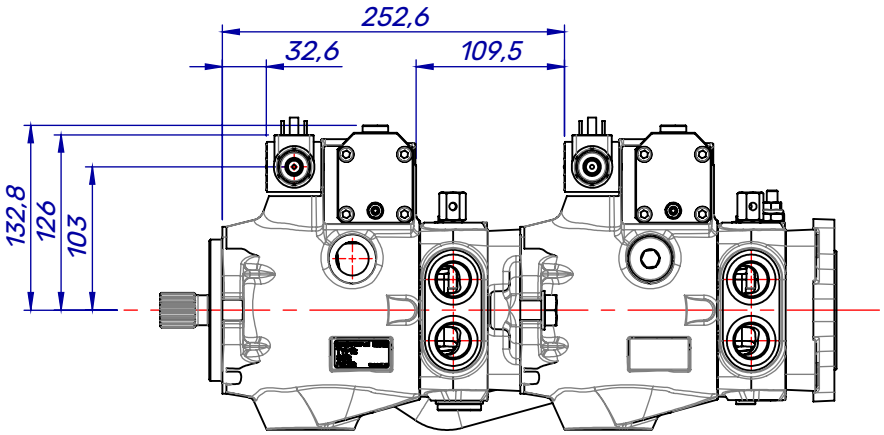

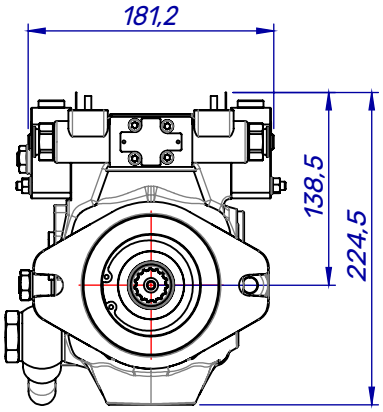

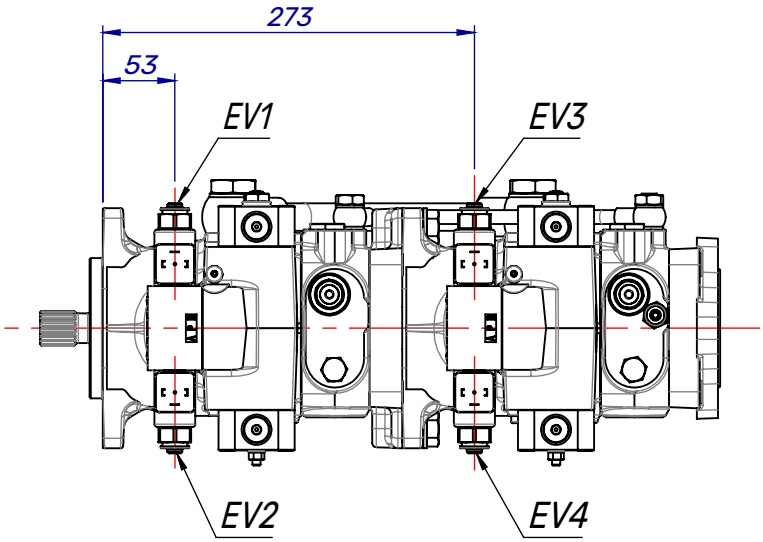

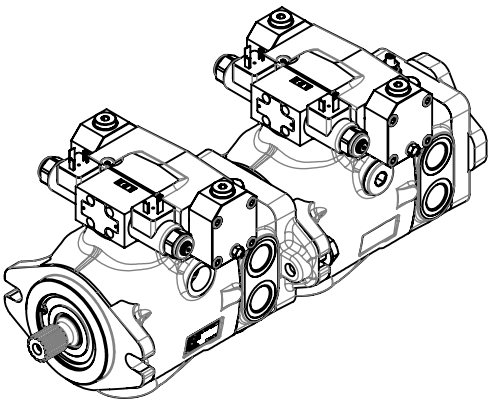

SHIX

HYDRAULIC SERVO CONTROL WITH FEED BACK

The pump displacement variation is obtained by adjusting the pressure on P1 and P2 servo control ports by means of a hydraulic proportional joystick (with integrated pressure reducing valves).
The servo control oil supply can be obtained by taking pressure from the boost pump (G port), see page 49.
The servo control return time can be adjusted by inserting a restrictor on the joystick supply line (0,5 ÷ 1,2 mm).

The servo control operation curve, in both directions, goes from 0,4 to 2 MPa (tolerance (± 5 %).
The adjusting curve of the hydraulic joystick has to be a little wider (0,3 ÷ 2,1 MPa).
Suggested curves for HPV series Joysticks: CR096 (see HT 73/B/105/0417/E catalogue).

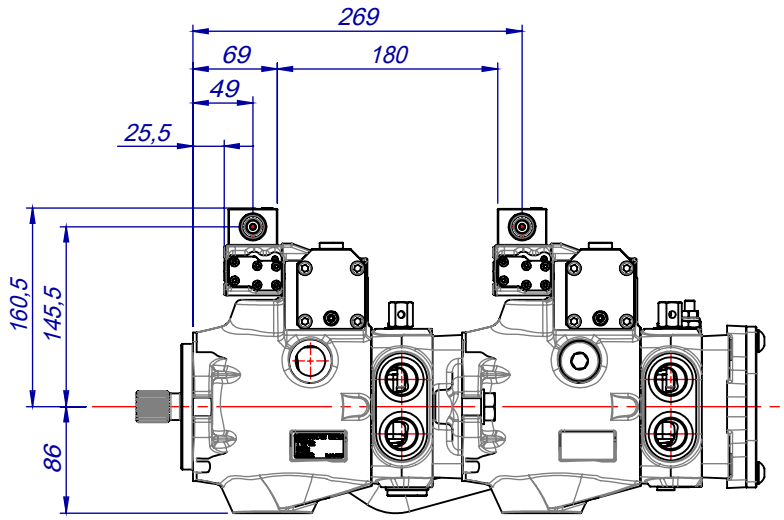

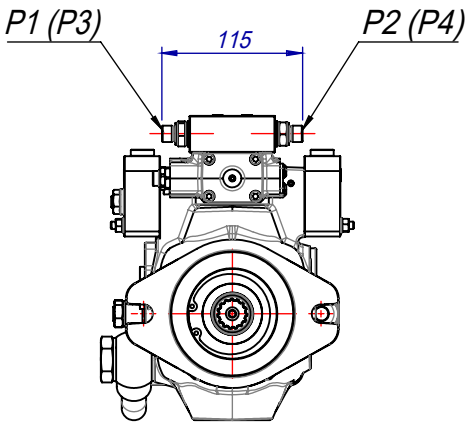

(continued)

SHIX

HYDRAULIC SERVO CONTROL WITH FEED BACK

HYDRAULIC DIAGRAM

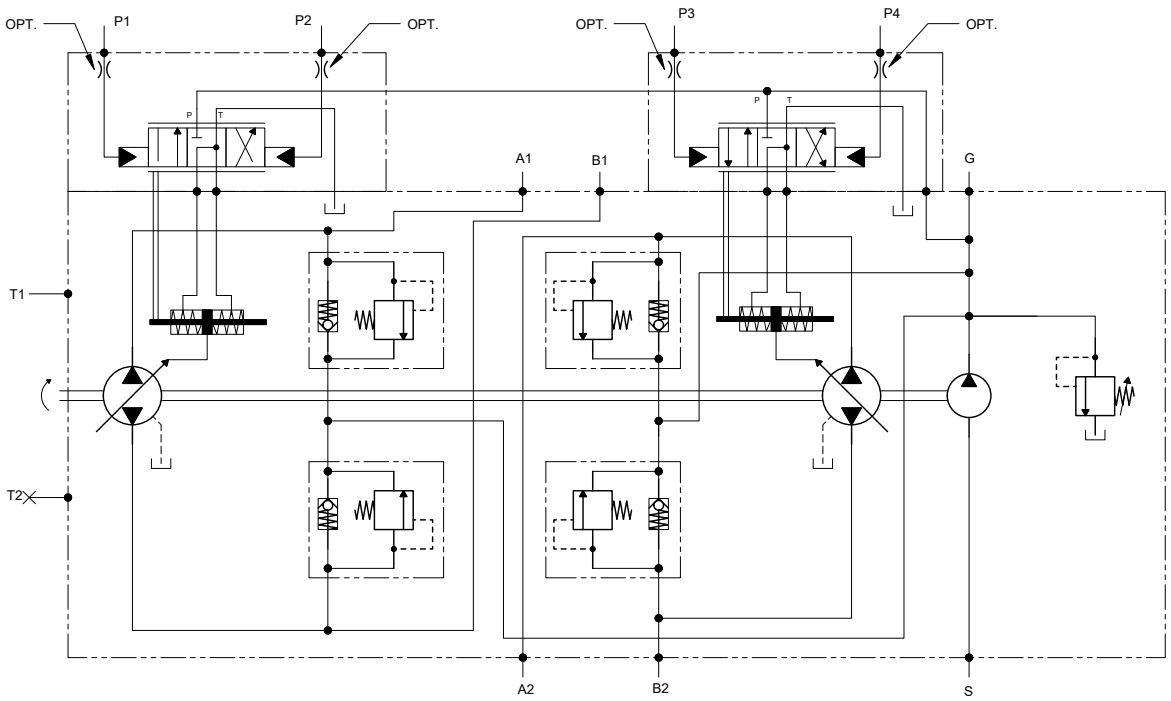

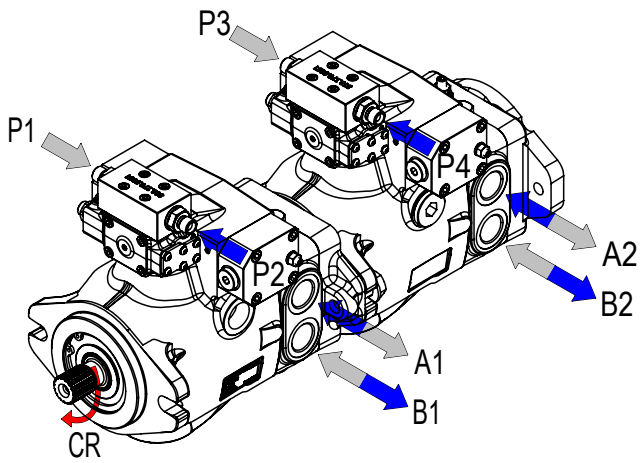

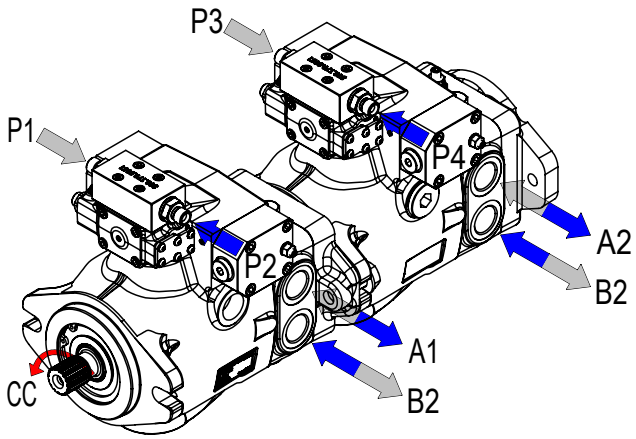

SMIX

MANUAL LEVER CONTROL WITH FEED BACK

The pump displacement variation is directly related to the angle position of the lever.

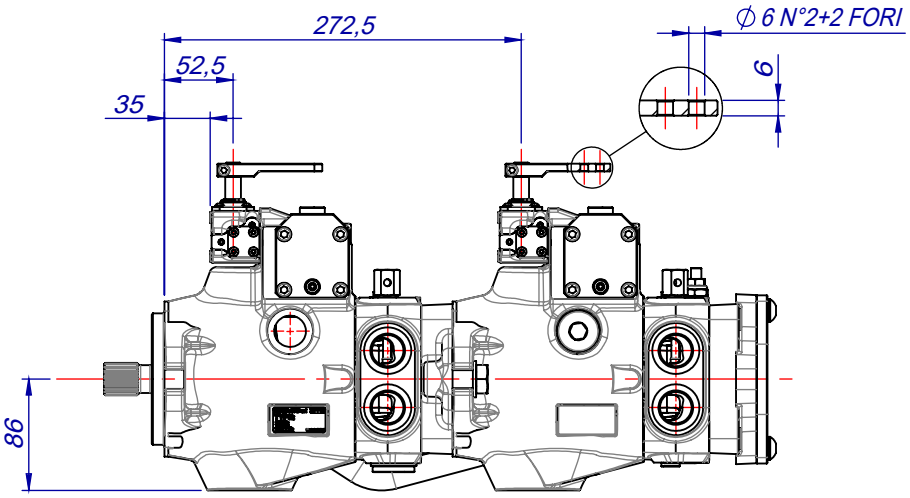

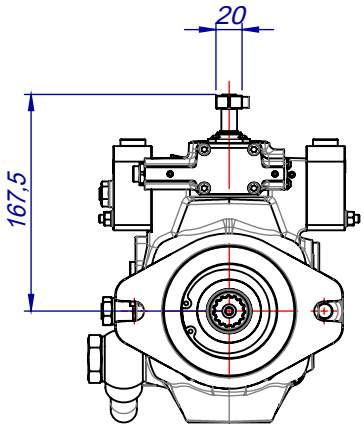

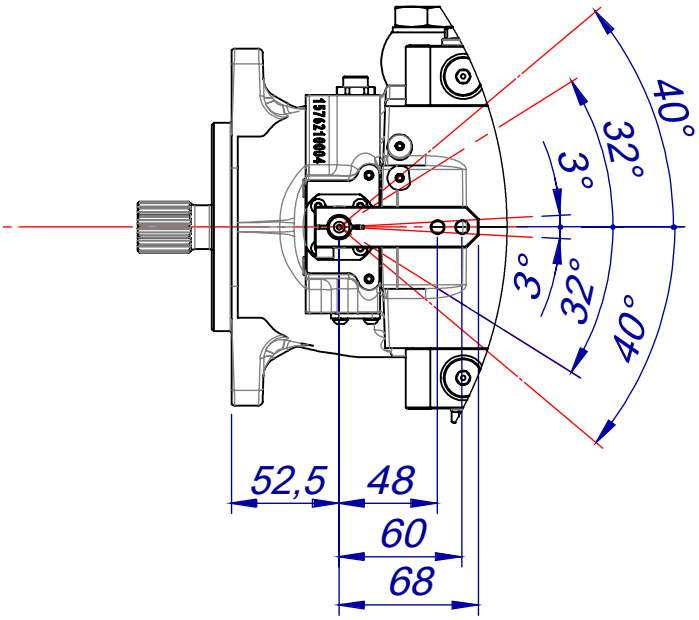

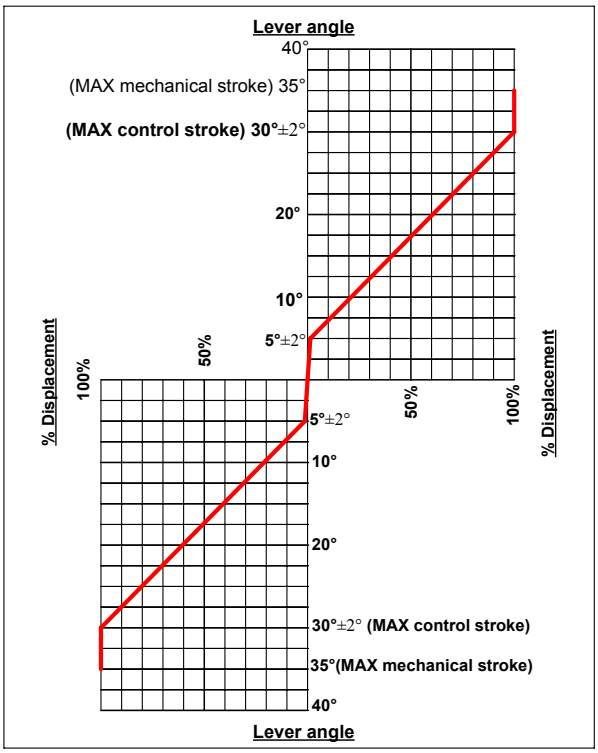

(continued)

SMIX

MANUAL LEVER CONTROL WITH FEED BACK

HYDRAULIC DIAGRAM

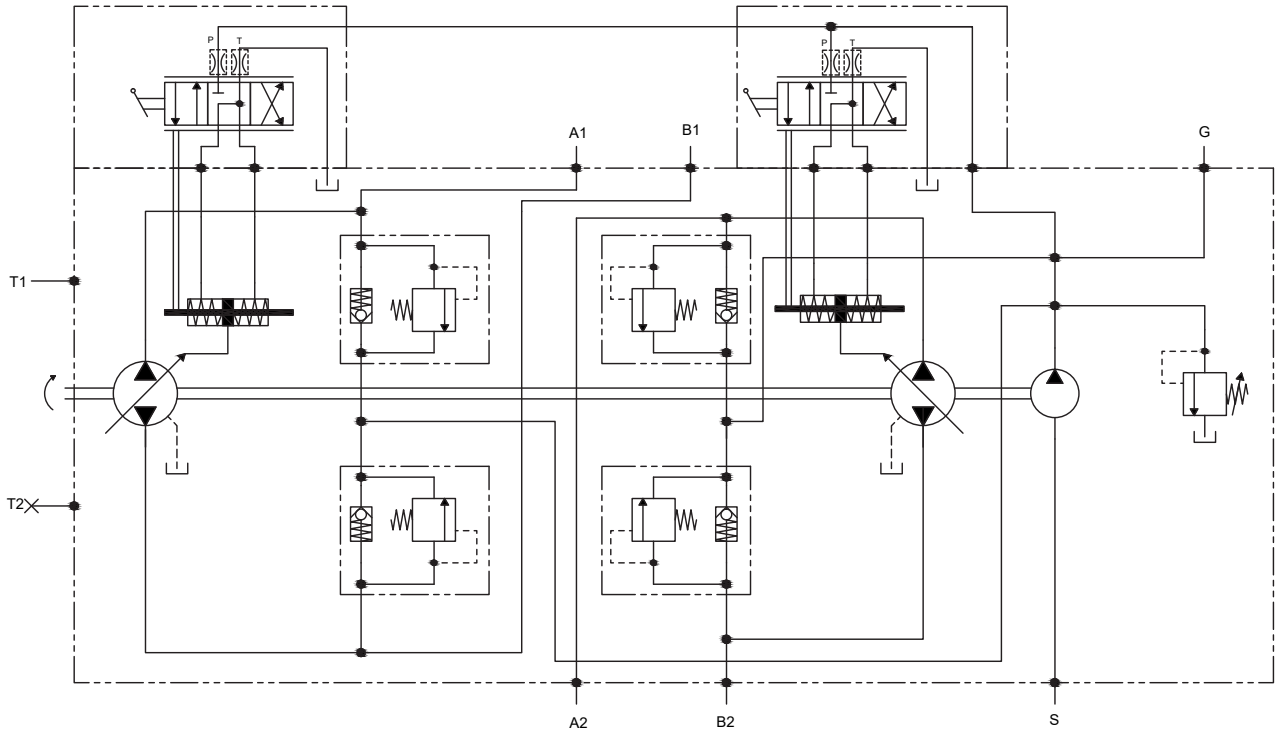

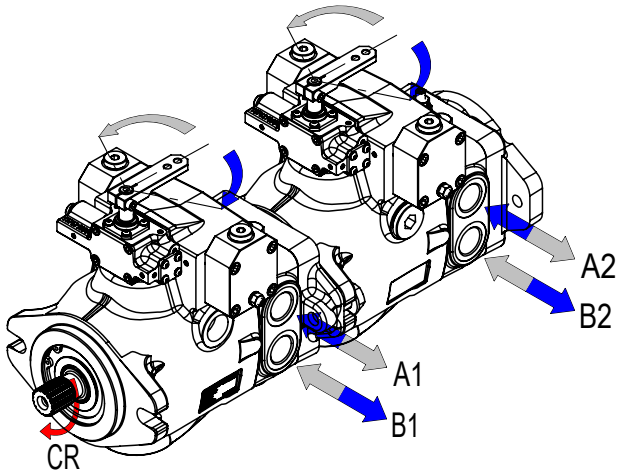

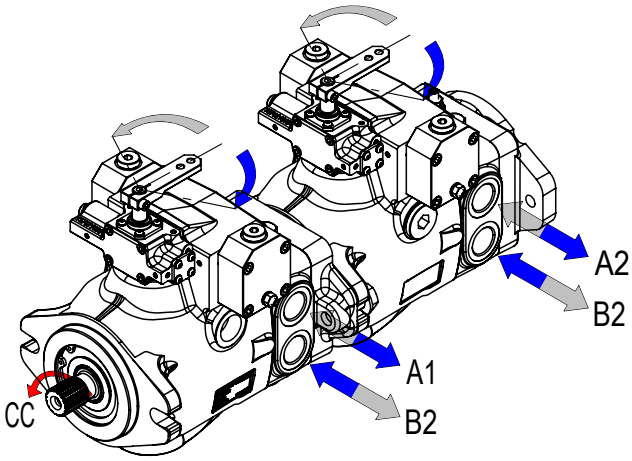

SEIX 1.2 (12V DC)
SEIX 2.2 (24V DC)

ELECTRO-PROPORTIONAL SERVO CONTROL WITH FEED BACK

(AMP junior timer connector)

The pump displacement variation is obtained by an electric signal, which varies approx.:

- from 315 to 630 mA (24V DC voltage)
- from 630 to 1260 mA (12V DC voltage)

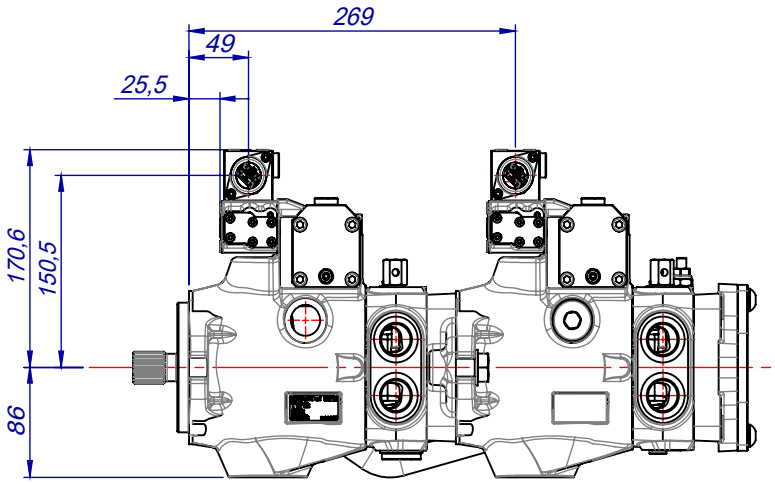

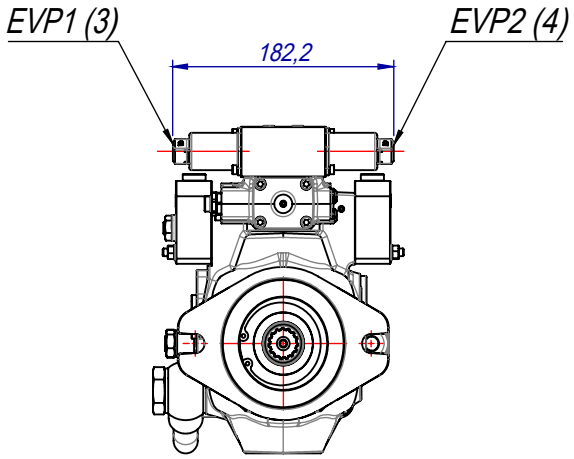

(continued)

SEIX 1.2 (12V DC)
SEIX 2.2 (24V DC)

ELECTRO-PROPORTIONALSERVOCONTROLWITHFEEDBACK

(AMP junior timer connector)

HYDRAULIC DIAGRAM

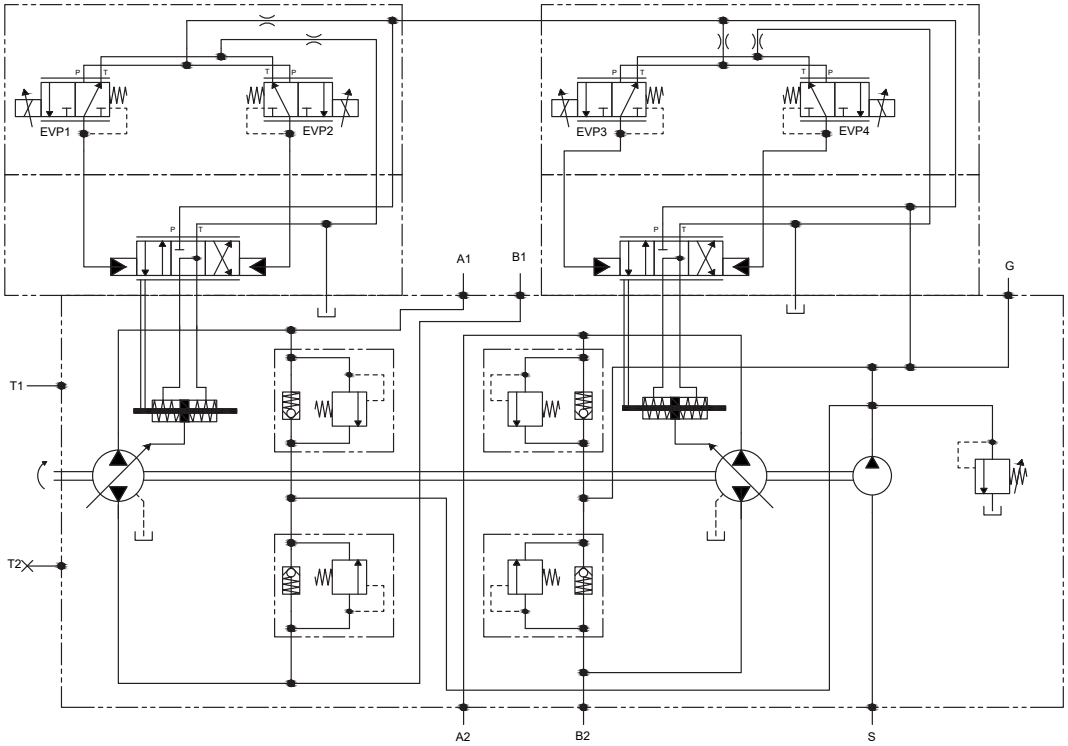

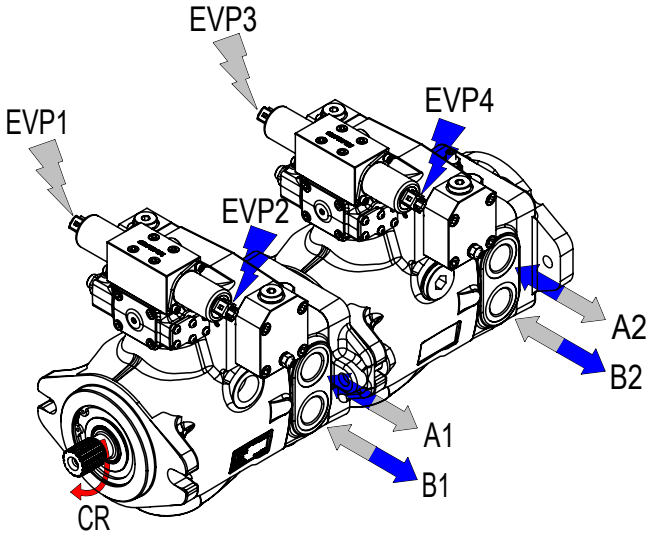

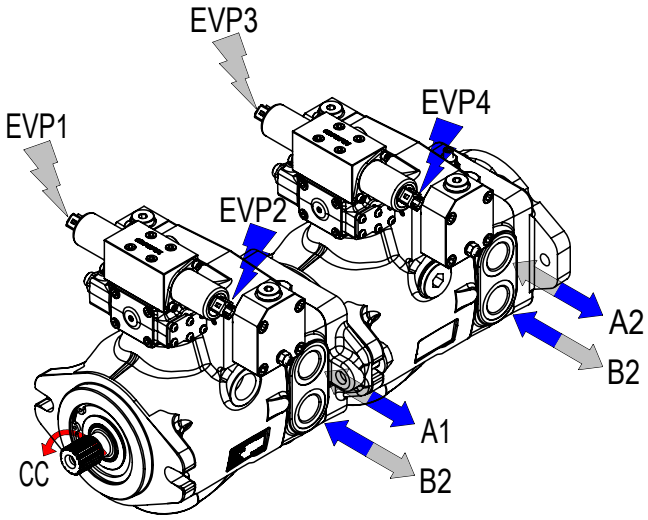

(continued)

SEIX 1.2 (12V DC)
SEIX 2.2 (24V DC)

ELECTRO-PROPORTIONALSERVOCONTROLWITHFEEDBACK

(AMP junior timer connector)

CURRENT-DISPLACEMENT GRAPHIC

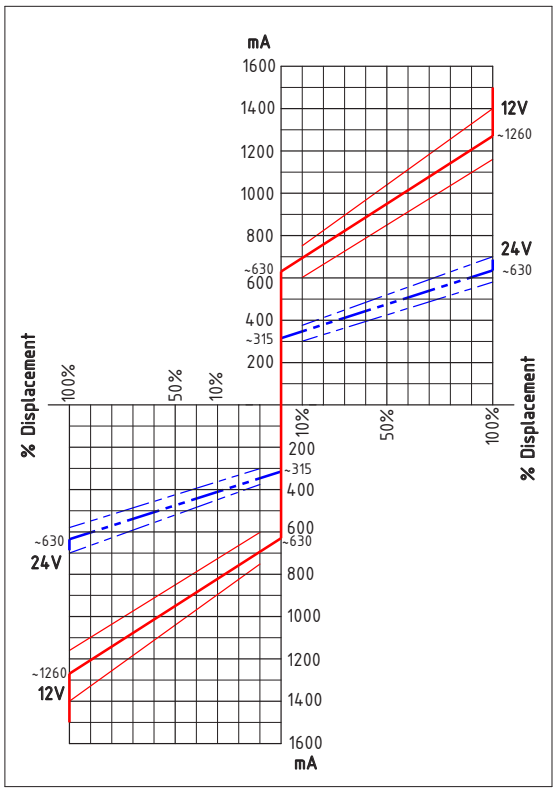

SOLENOID VALVE ELECTRICAL FEATURES		
Voltage	12 V DC	24 V DC
Electric current	1500 mA	750 mA
Load resistence	4,72 Ω ± 5%	20,8 Ω ± 5%
Type of control	Current control	
	PWM 100 Hz (suggested)	
Type of connection	AMP Junior Timer	
Protection class	Until IP6K6 / IPX9K	

SOLENOID VALVE HYDRAULIC FEATURES	
Max. pressure (P, T)	pP= 5 MPa, pT= 3 MPa
Hysteresis (w/PWM)	<0,07 MPa (pA=2,0)
	<0,1 MPa (pA=2,5)
	<0,15 MPa (pA=3,5)
Filtration ratio	125 µm
Oil contamination level	Min. filtration ratio: 20/18/15
	According ISO 4406
	Hydraulic oil DIN 51524
Min./max. oil temperature	From -20 to +90°C

SEIX 1.2D (12V DC)
SEIX 2.2D (24V DC)

ELECTRO-PROPORTIONALSERVOCONTROLWITHFEEDBACK

(Deutsch connector)

The pump displacement variation is obtained by an electric signal, which varies approx.:

- from 315 to 630 mA (24V DC voltage)
- from 630 to 1260 mA (12V DC voltage)

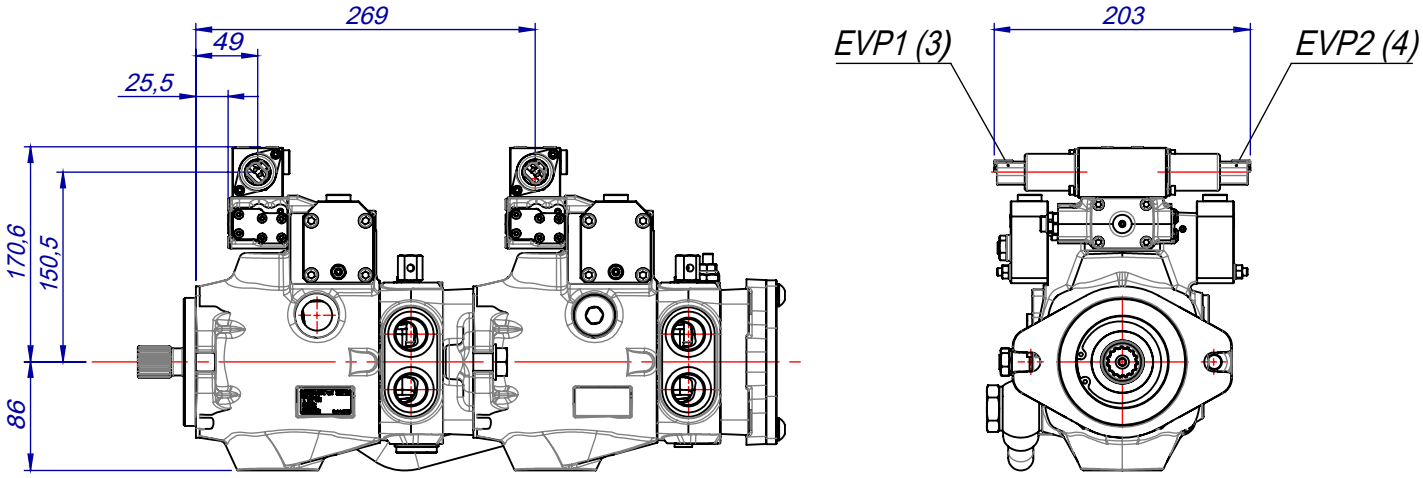

(continued)

SEIX 1.2D (12V DC)
SEIX 2.2D (24V DC)

ELECTRO-PROPORTIONALSERVOCONTROLWITHFEEDBACK

(Deutsch connector)

HYDRAULIC DIAGRAM

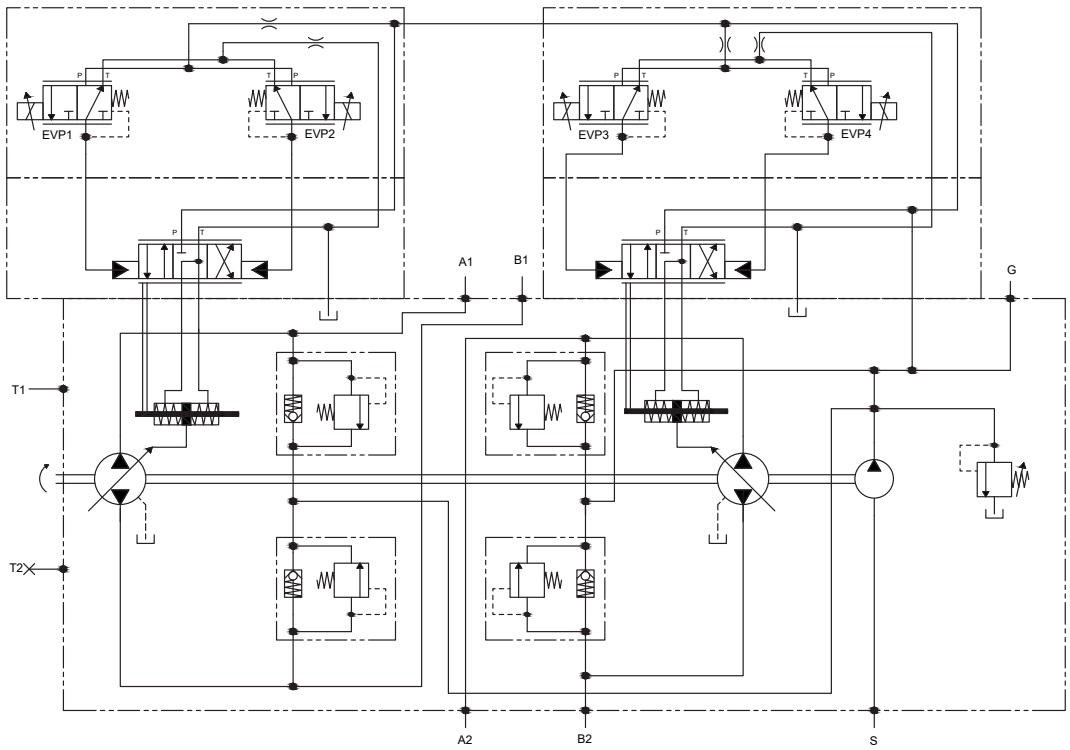

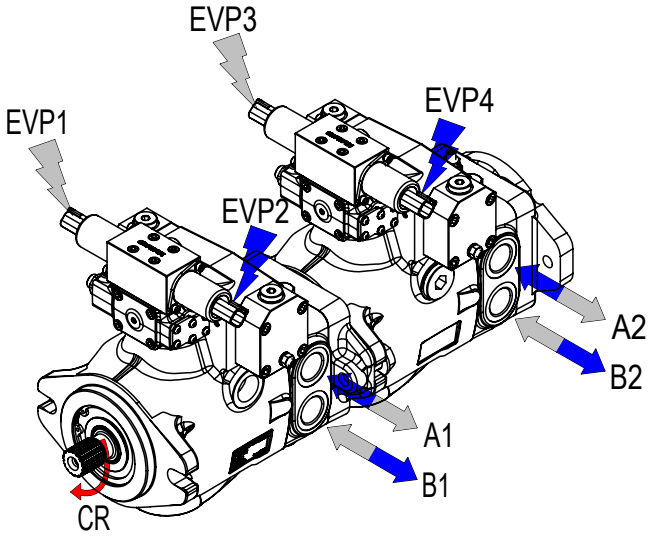

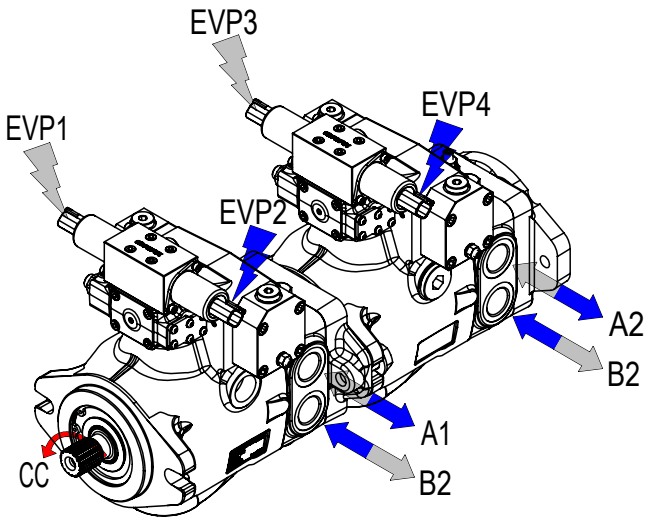

(continued)

SEIX 1.2D (12V DC)
SEIX 2.2D (24V DC)

ELECTRO-PROPORTIONALSERVOCONTROLWITHFEEDBACK

(Deutsch connector)

CURRENT-DISPLACEMENT GRAPHIC

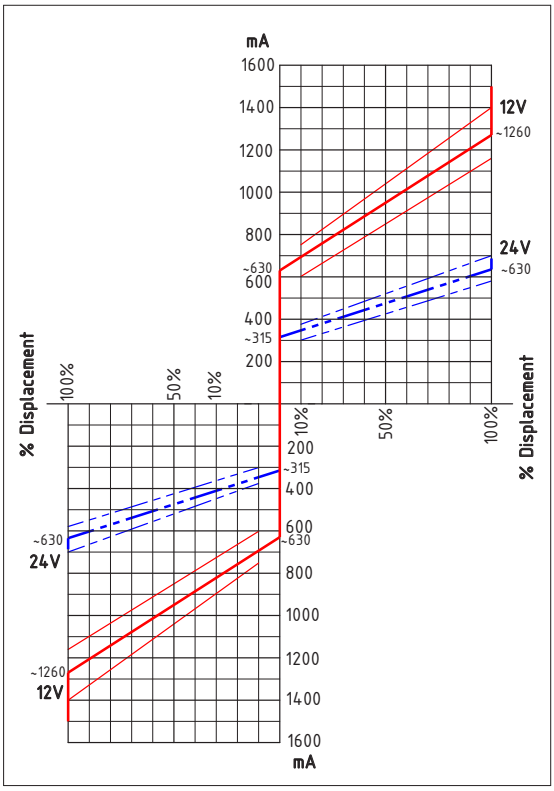

ELECTRICAL FEATURES		
Voltage	12 V DC	24 V DC
Electric current	1500 mA	750 mA
Load resistence	4,72 Ω ± 5%	20,8 Ω ± 5%
Type of control	Current control	
	PWM 100 Hz (suggested)	
Type of connection	AMP Junior Timer	
Protection class	Until IP6K6 / IPX9K	

HYDRAULIC FEATURES	
Max. pressure (P, T)	pP= 5 MPa, pT= 3 MPa
Hysteresis (w/PWM)	<0,07 MPa (pA=2,0)
	<0,1 MPa (pA=2,5)
	<0,15 MPa (pA=3,5)
Filtration ratio	125 µm
Oil contamination level	Min. filtration ratio: 20/18/15
	According ISO 4406
	Hydraulic oil DIN 51524
Min./max. oil temperature	From -20 to +90°C

REAR PUMP MOUNTING FLANGES

SA

SAE-A - 4 HOLES

Max. torque = 120 Nm

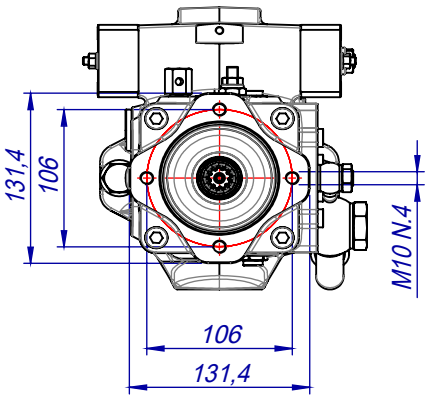

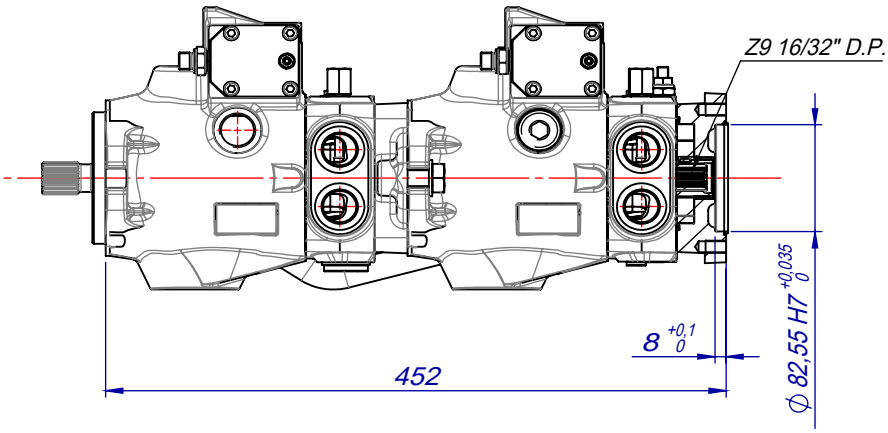

SB

SAE-B - 2 HOLES

Max. torque = 300 Nm

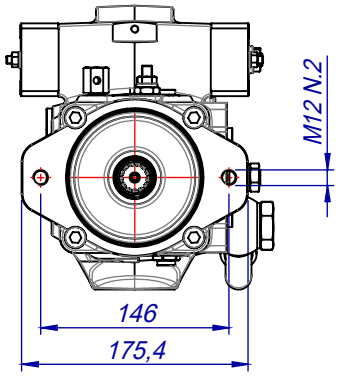

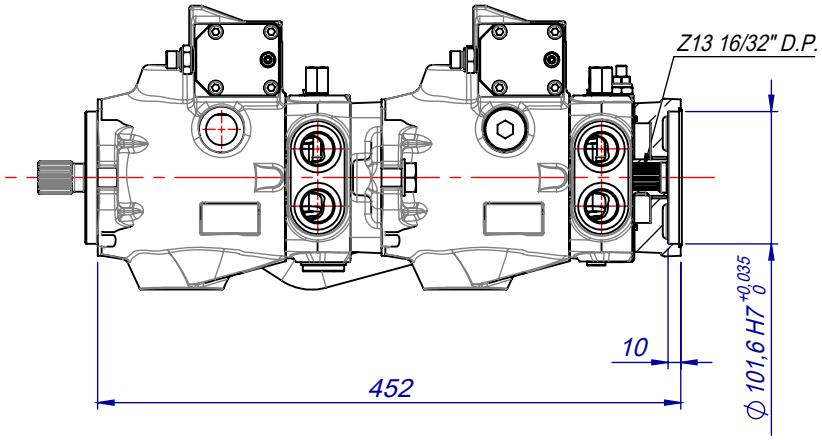

(continued)

REAR PUMP MOUNTING FLANGES

C-SA

CLOSED COVER WITHOUT REAR FITTING

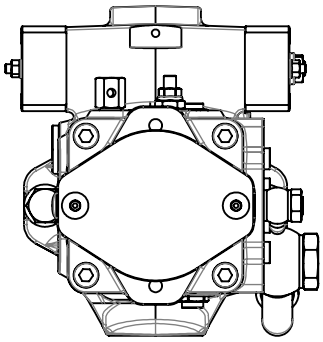

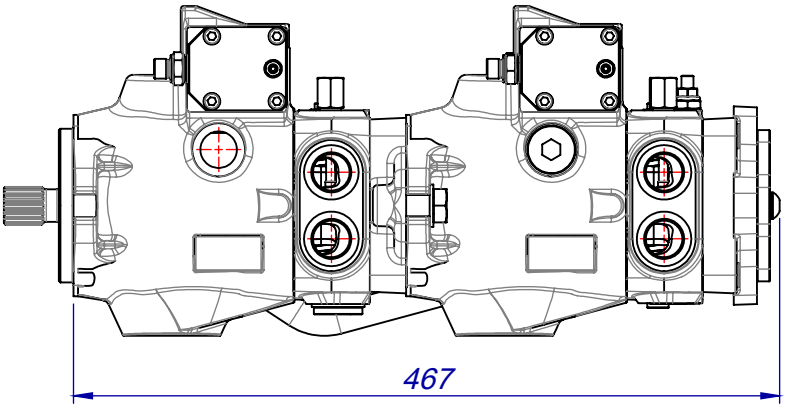

OPTIONAL SB

SCREW BY- PASS

To by pass the oil flow from one direction to the other, with the pump not running or in emergency condition, a by pass screw can be actuated to connect the 2 lines of the hydraulic system. The orifice is completely open after 4 counter-clockwise rotations of the screw.

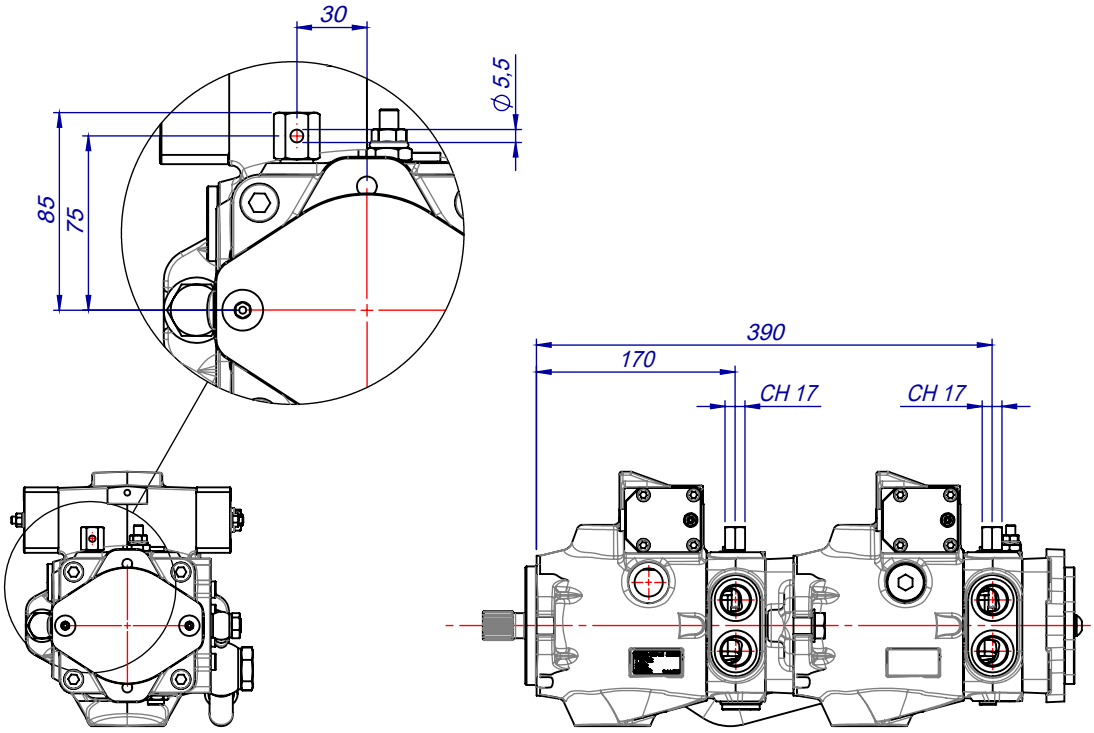

HYDRAULIC DIAGRAM

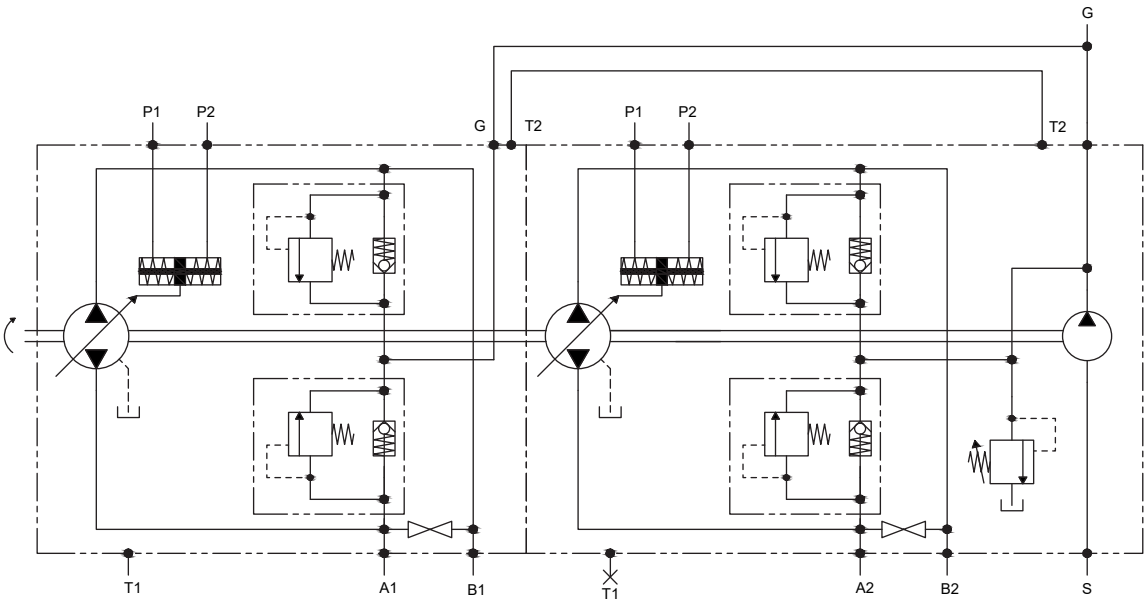

OPTIONAL FR

PRE-ARRANGED FOR CONNECTION WITH EXTERNAL FILTER

The pre-arrangement for the connection with an external filter allows the filtration of the oil of the boost pump under pressure.
The filter is not included and must be with a by-pass, filtration level 10 µm and must be of suitable size for the flow-rate of the boost pump.

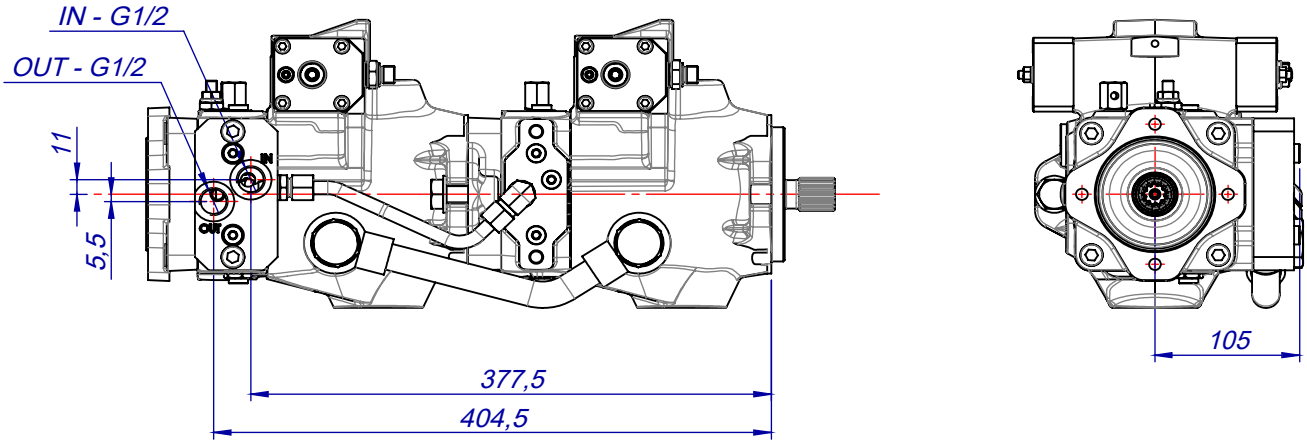

HYDRAULIC DIAGRAM

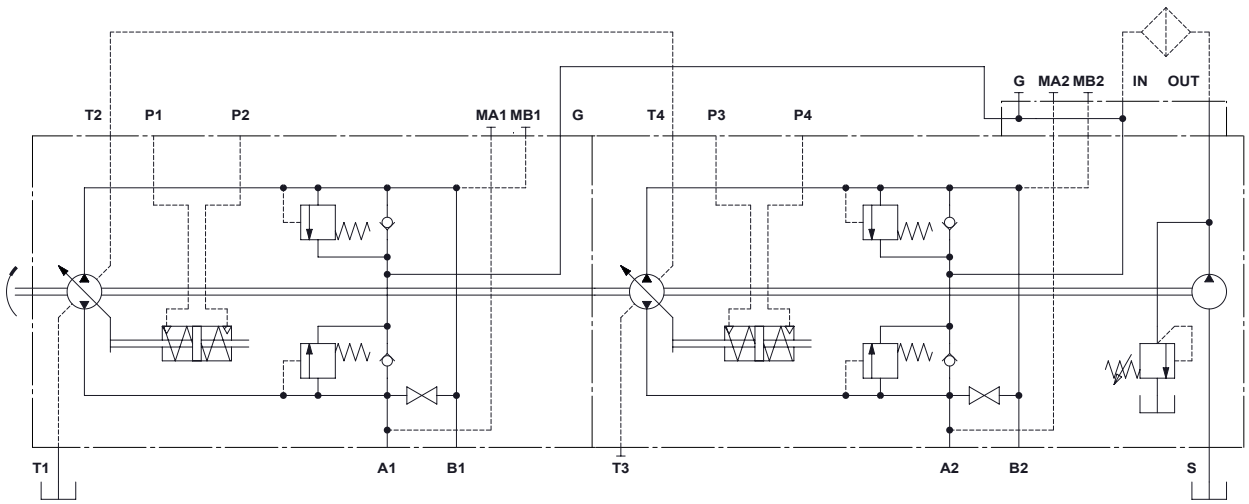

OPTIONAL MOB SHI

MAN ON BOARD

On the pump a normally open electrical operated valve can be fitted. The valve allows the flow delivery only when energized. This function is used to increase the safety of the machine. The solenoid valve is available for 12V or 24V DC voltage.

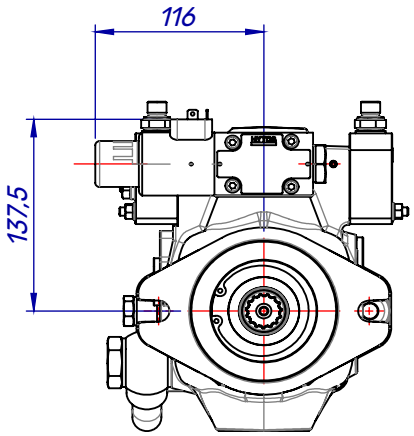

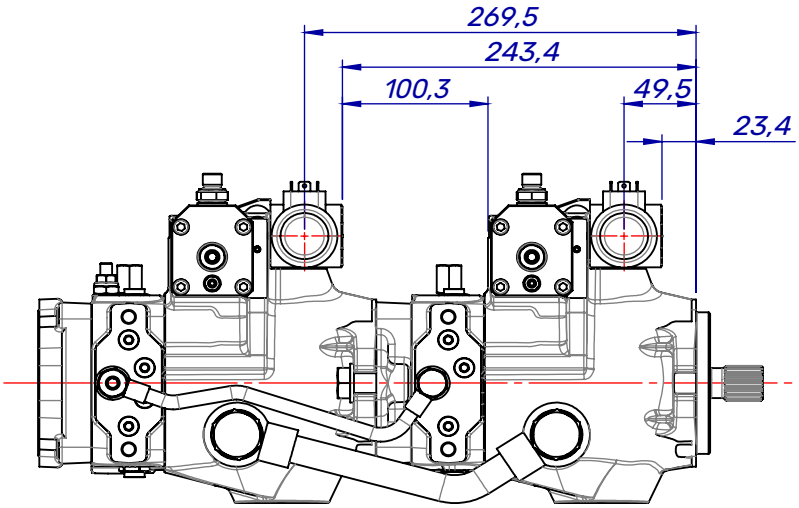

HYDRAULIC DIAGRAM

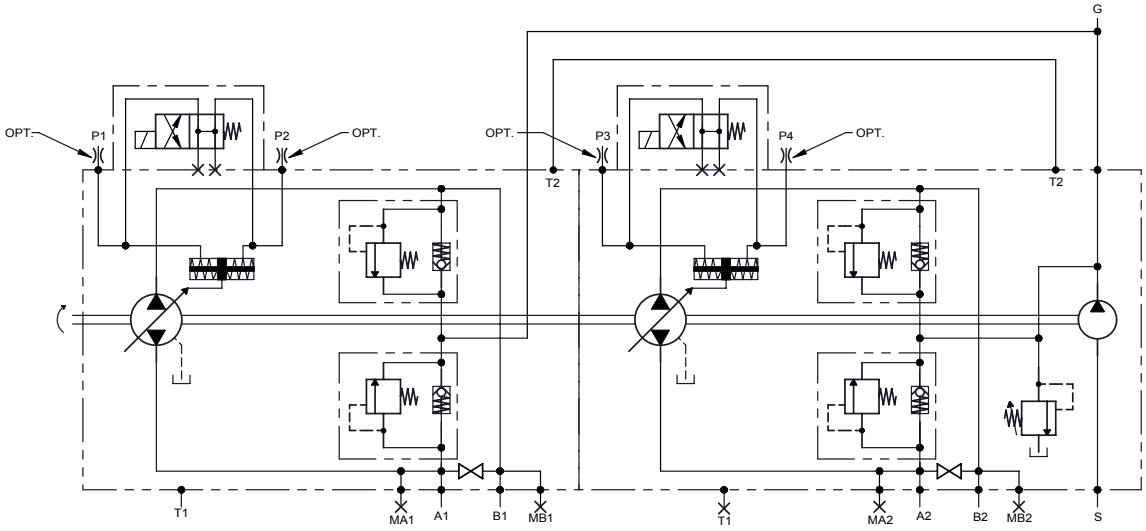

(continued)

OPTIONAL MOB SHI

MAN ON BOARD

TECHNICAL FEATURES

TECHNICAL CHARACTERISTICS	
Maximum pressure	32 MPa
Maximum flow	80 l/min.
Leakage	Max. 5 drops/Min. at 30 MPa
Respone time	32 ms
Temperature	-20°C / +90°C

ELECTRIC CHARACTERISTICS	
Voltage	12V / 24V
Insulation class	IP 67
Frequency	1000 Hz
Tollerance of supply	10 - 30 DC
Ambient temperature	-30°C / +50°C
Connector *	EN 17531-803-A

* Other types of connectors are available.

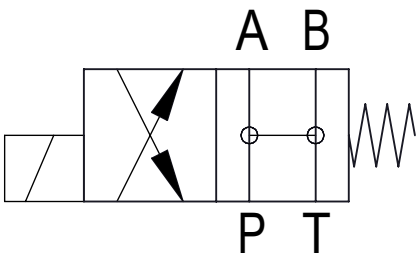

OPTIONAL MOB SEI

MAN ON BOARD

On the pump a normally open electrical operated valve can be fitted. The valve allows the flow delivery only when energized. This function is used to increase the safety of the machine. The solenoid valve is available for 12V or 24V DC voltage.

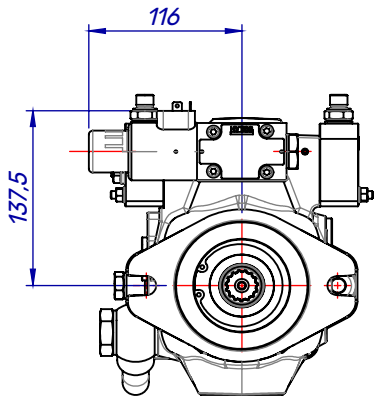

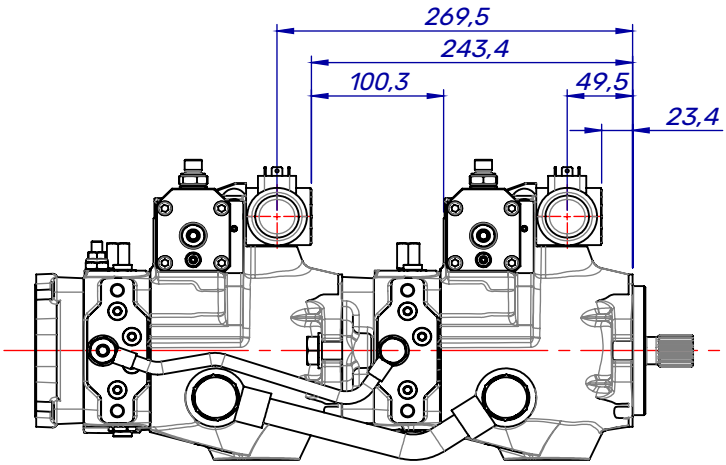

HYDRAULIC DIAGRAM

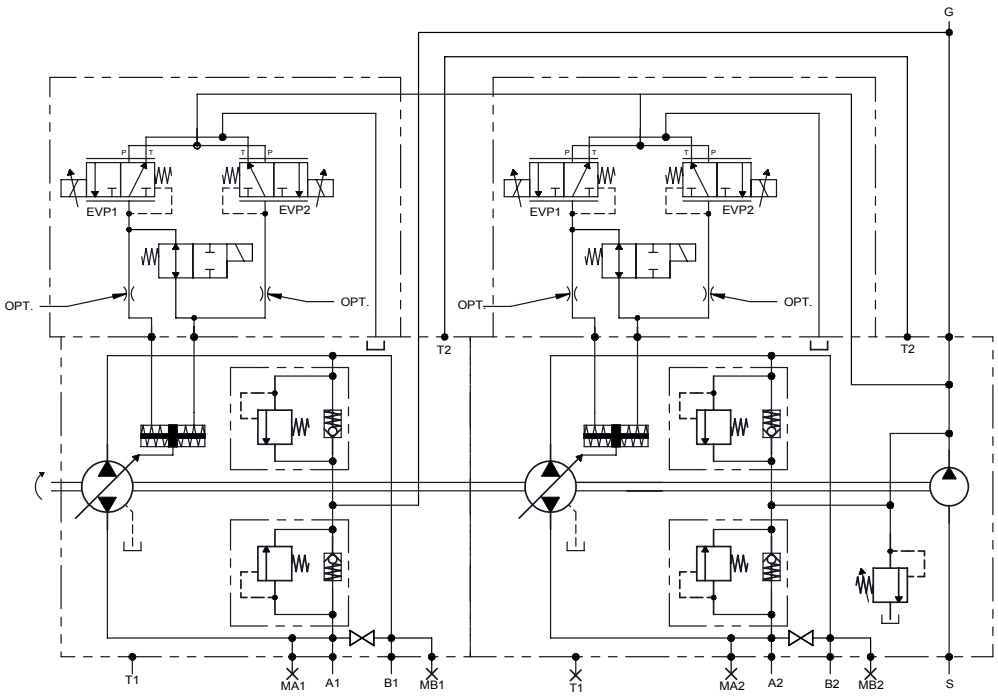

(continued)

OPTIONAL MOB SEI

MAN ON BOARD

TECHNICAL FEATURES

TECHNICAL CHARACTERISTICS	
Maximum pressure	25 MPa
Maximum flow	10 l/min.
Leakage	max. 80 cc/min. at 25 MPa
Respone time	30 ms
Temperature	-30°C / +110°C

ELECTRIC CHARACTERISTICS	
Voltage	12V / 24V
Insulation class	F
Power	18W
Tollerance of supply	+10% / -5% AC
Ambient temperature	-30°C / +60°C
Connector *	DIN 43650 Deutsch (90°)

* Other types of connectors are available.

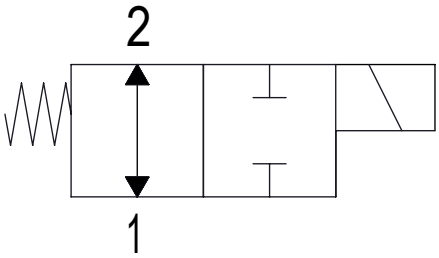

TROUBLE SHOOTING

TROUBLES	CAUSE	REMEDY
High noise level	Too high rotation speed of the pump.	Reduce pump rotation speed.
	Wrong rotation direction.	Check the rotation direction of the pump.
	Obstruction in suction line - air in the suction line - wrong oil viscosity - diameter of suction line too small.	Check oil type and viscosity. Check internal diameter of suction line. Remove restrictions. Check oil level of reservoir. Eliminate air intake.
	Not correct connection of the pump. Not correct diameter of pipes / hoses.	Check the pump connections and the pipe / hose diameters according to notes.
	Vibrations of relief valves .	Check the inlet suction line - Check and replace relief valves.
	Internal parts worn out.	Check and replace.
	Wrong pump connection to the prime mover.	Check connection and rotation of direction.
	Too low rotation speed of the pump.	Increase the pump rotation speed.
Low flow rate	Obstructions in the suction line - wrong viscosity.	Check oil type and viscosity. Check internal diameter of suction line. Remove restrictions. Check oil level of reservoir. Eliminate air intake.
	Low remote control pressure.	Check and adjust.
	High internal leakage.	Check the case drain flow.
	Low rotation speed of the pump.	Increase speed of the pump.
Instable or low pressure	Obstruction of suction line - air in the suction line - wrong oil viscosity - diameter of suction line too small.	Check oil type and viscosity. Check internal diameter of suction line. Remove restrictions. Check oil level of reservoir. Eliminate air intake.
	Vibration of relief valves.	Check the inlet suction line. Check and replace relief valves.
	Internal parts worn out.	Check and replace.
Over heating	High oil temperature at suction inlet.	Check the cooling system.
	Internal parts worn out.	Check - replace.
	Wrong setting of relief valves.	Check - adjust the setting of relief valves.

ACCESSORIES

Hydraulic Gear Pump German Standard B1
Hydraulic Gear Pump German Standard B2
Hydraulic Gear Pump SAE-A Standard

For more detailed information ask for catalogue HT 15 F 20.....

Hydraulic Remote Servo Controls

For more detailed information ask for catalogue HT 73 B 105 0919 E

Electric and Electronic Remote Servo Controls

For more detailed information ask for catalogue HT 73 B 203 0516 E

Belt Drive Support BDS SAE-A / SAE-B

For more detailed information ask

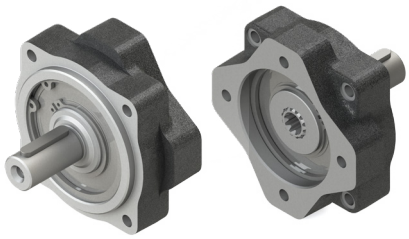

SAE-A

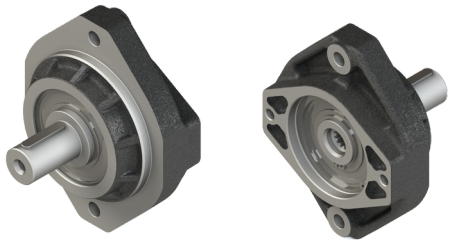

SAE-B

Bell Housings and Couplings for Pump Assembly on Internal Combustion Engines

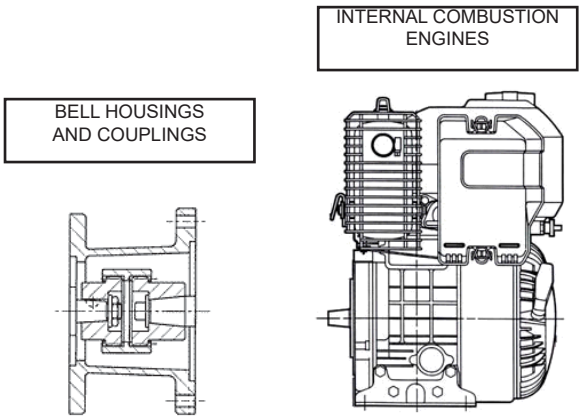

For more detailed information ask our technical departement

PUMPS

Closed Loop Axial Piston Pumps (Variable Displacement) - 6-110 cc

Model	Displacement $cm^3/n.$	Rated Pressure MPa	Peak Pressure MPa	Maximum speed n/min.	Weight kg (single pump)
TPV 1100 TPV 1300	6, 8, 9, 11, 12, 13	30	35	3.600	8,8
	15, 17		30		
	18		30		
	19, 21	22	28	3.200	
TPV-TPVTC 1500	17, 18, 19, 21	35	40	3.600	14
TPV 3200	21, 28	25	35		22
TPV-TPVT 3600	26, 28, 30, 31, 32, 34, 36, 38, 43	40	45		28
TPV 4300	32, 38, 45, 50	28	35		23
TPV 5000	46, 50, 64	30	40		29
TPV 9000	55	40	45	4.000	55
	72			4.100	68
	90			4.000	
	110			3.800	

Open Loop Axial Piston Pumps (Fixed Displacement) - 32-50 cc

Model	Displacement $cm^3/n.$	Rated Pressure MPa	Peak Pressure MPa	Maximum speed n/min.	Weight kg (single pump)
TPF 60	35, 40, 46	35	42	2.800	20,5
	50		41	2.500	

Bent Axis Pumps - 12-130 cc

Model	Displacement $cm^3/n.$	Rated Pressure MPa	Peak Pressure MPa	Maximum speed n/min.	Weight kg
TPB - TAP 70	12.6	35	40	3.300	7,5
	17.0			3.200	
	25.4			2.550	8,5
	34.2			2.250	
	41.2, 47.1			2.200	15,5
	56.0			2.100	
	63.6			2.050	
	83.6, 90.7, 108.0			1.700	27,0
	130.0			1.600	29,5
The table values can change in function of the configuration.					

As HANSA-TMP has a very extensive range of products and some products have a variety of applications, the information supplied may often only apply to specific situations.

If the catalogue does not supply all the information required, please contact HANSA-TMP.
In order to provide a comprehensive reply to queries we may require specific data regarding the proposed application.

Whilst every reasonable endeavour has been made to ensure accuracy, this publication cannot be considered to represent part of any contract, whether expressed or implied.

The data is this catalogue refer to the standard product.
The policy of HANSA-TMP consists of a continuous improvement of its products. It reserves the right to change the specifications of the different products whenever necessary and without giving prior information.

HANSA-TMP
MANUFACTURING YOUR SUCCESS

HANSA-TMP S.r.l.
Via M. L. King, 6 – 41122 Modena (ITALY)
Tel.: +39 059 415 711
Fax: +39 059 415 730
hansatmp@hansatmp.it
www.hansatmp.com

Certified Company
ISO 9001:2015 – ISO 14001:2015

Share Capital: € 300.000,00
VAT Number: IT01167360369
REA Number: MO-225785